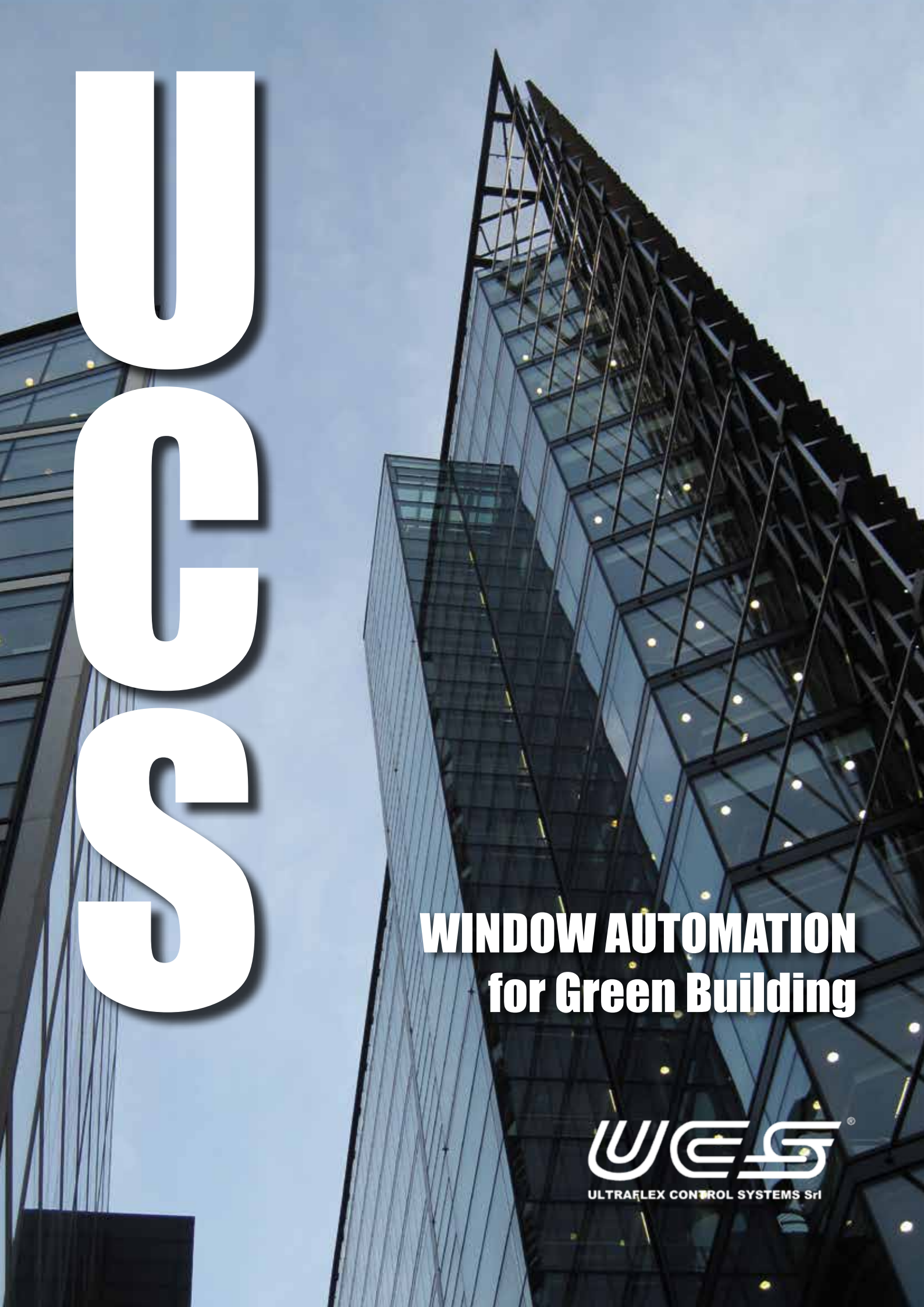

UCS

WINDOW AUTOMATION for Green Building

ULTRAFLEX CONTROL SYSTEMS Srl

ULTRAFLEX GROUP

Ultraflex Group has over 80 years of experience in manufacturing and distributing the highest quality and most innovative products.
The Ultraflex Group affiliate companies design and produce widely known equipments in the Marine, Industrial, Architectural, Led technology and alternative energy fields.

ULTRAFLEX CONTROL SYSTEMS S.r.l.
Window Automation for Green Building

ULTRAFLEX S.p.a.
Steering and control systems for pleasure boats.

UFLEX S.r.l.
World wide distribution of marine accessories.
Systems and accessories for alternative energy applications.

INDUSTRIA di LEIVI S.r.l.
Mechanical remote controls in the industrial field.

UFLEX USA Inc.
Manufacturing the world finest marine products.

USGBC® and the related logo are trademarks owned by the U.S. Green Building Council and are used with permission

CONTENTS

GREEN LINE

ELECTRIC SYSTEMS FOR VENTILATION AND SMOKE/HEAT EXTRACTION

Electric chain actuators

BMSline	Programmable and addressable chain actuators			5
BMSline - MY VENT	Integrating window automation into Building Management Systems			8
NANO	Max force 400 N	Max stroke 800 mm	NEW	12
QUASAR	Max force 300 N	Max stroke 500 mm		16
QUASAR L	Max force 300 N	Strokes 600-750-1000 mm		20
VEGA	Max force 300 N	Stroke 300 mm		24
TWIN QUASAR - TWIN VEGA	Max force 600 N	Strokes 500-300 mm		28
STILE	Max force 300 N	Strokes 230-400 mm		32
SINTESI	Max force 180 N	Strokes 250-380 mm		36
SUPERMASTER	Max force 400 N	Strokes 450-600-800 mm		40

Multiple locking systems

E-LOCK	Compatible with actuators Series QUASAR, VEGA and NANO		44
PLUSULTRA	Compatible with actuators Series QUASAR, QUASAR L and VEGA		46

Electric linear spindle actuators

MAX	Force in push action 450-350 N	Strokes 180-300-500 mm	48
ULYSSES	Force in push action 650 N	Strokes 180-300 mm	50

Electric linear rack actuators

T-RACK	Force in push action 1000-2000 N	Strokes 350-550-750-1000 mm	52
RACK	Force in push action 650-1500 N	Strokes 180-350-550-750-1000 mm	56

Entrapment Protection Systems

EPS		60

Weather and control systems

CRM CONTROL PANEL		62
SOLAR POWER SYSTEM ULTRA 24 VDC	NEW	63

Smoke ventilation control panels

CONTROL UNIT FOR SMOKE AND HEAT EXHAUST VENTILATORS INCLUDING METEOROLOGICAL DETECTION AND COMFORT VENITLATION	NEW	64

Control accessories

ACCESSORIES FOR ELECTRIC ACTUATOR CONTROL		66

RED LINE

PNEUMATIC SYSTEMS FOR SMOKE AND HEAT EXTRACTION

PNEUMATIC CYLINDERS	68
VALVES AND ACCESSORIES	70
ELECTRIC ACCESSORIES TO CONTROL PNEUMATIC CYLINDERS	72
INSTALLATION EXAMPLES	73

MEC LINE

MECHANICAL SYSTEMS FOR VENTILATION

MANUAL REMOTE CONTROLS	74
CONTROL OPERATORS	76
TRANSMISSION ELEMENTS	77

Opening mechanisms

CHAIN MECHANISM	78
FORKS AND SWIVELS	79
LOCKING OPENERS	80

Opening systems - kit for single windows

BRAVO - FAST ASSEMBLY KIT FOR BOTTOM HINGED WINDOWS	81
KIT FOR BOTTOM HINGED WINDOWS	82
KIT FOR TOP HINGED WINDOWS	83
TELESCOPIC SPINDLE	84
CAT - MANUAL CHAIN OPERATOR	85

GUIDE TO SELECT THE ACTUATOR	86
SAFETY WARNINGS, GENERAL INFORMATIONS and QUALITY SYSTEM	88
WARRANTY AND SALES CONDITIONS	89

Evolution

ULTRAFLEX CONTROL SYSTEMS Srl

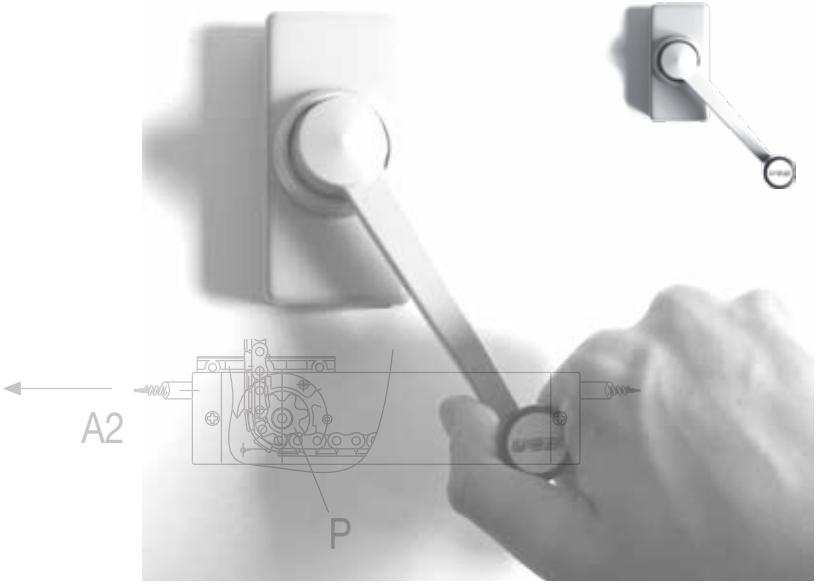

1970s
Manual solutions

Reliable and economical manual control for remote controlled windows.
Basic natural ventilation without automatic environmental control.

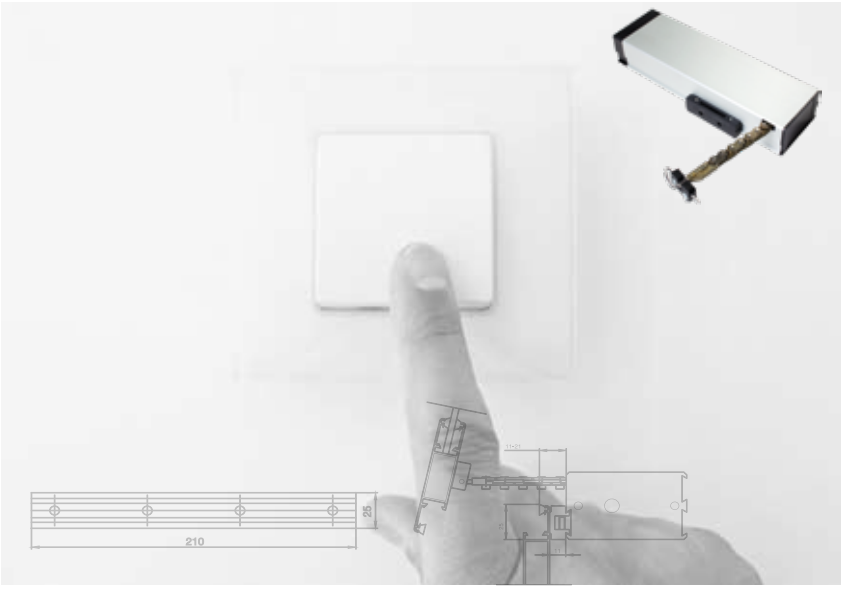

1990s
Electric solutions

Introducing electrical window actuators and automatic meteorological control.
Substaintial improvement in comfort and ventilation creating the basis for today's integrated solution.

Today
Integrated solutions

New generation of compact actuators with integrated programmable circuit board, providing two-way communication with computer system.
All actuator functions are totally programmable and the actuators provide 100% real-time feedback on their status. Integrating window automation with the BMS Building Management System will enable interaction with other systems in building (HVAC, lighting...)

Mission

Energy Saving

Green Building

Besides capital cost savings worth 15% as compared to air conditioning, naturally ventilated buildings also substantially save on energy due to lower costs for operating the natural ventilation solution (70 – 90% less), in addition to the qualitative, psychological effects on the building's occupants.
With the mixed ventilation mode, integration and total communication is essential between the ventilation system and mechanical/air conditioning system, in order to reduce the power consumed by fans
which could represent up to 25% of total power consumed by the building.

Comfort

Natural Ventilation

Latest surveys report that 90% of people are more satisfied with their indoor environment in naturally ventilated and mixed mode buildings than in buildings with mechanical ventilation and air conditioning; this preference is mainly due to the fact that occupants have easy access, can regulate their indoor environment and are not entirely cut off from the outside environment. A higher ventilation rate implies curbing the concentration of CO2 which can negatively affect people going about their daily tasks, and, in general, reducing cases of illness: 25% to 67% less sick building syndrome symptoms, to the advantage of productivity by 3-18%.

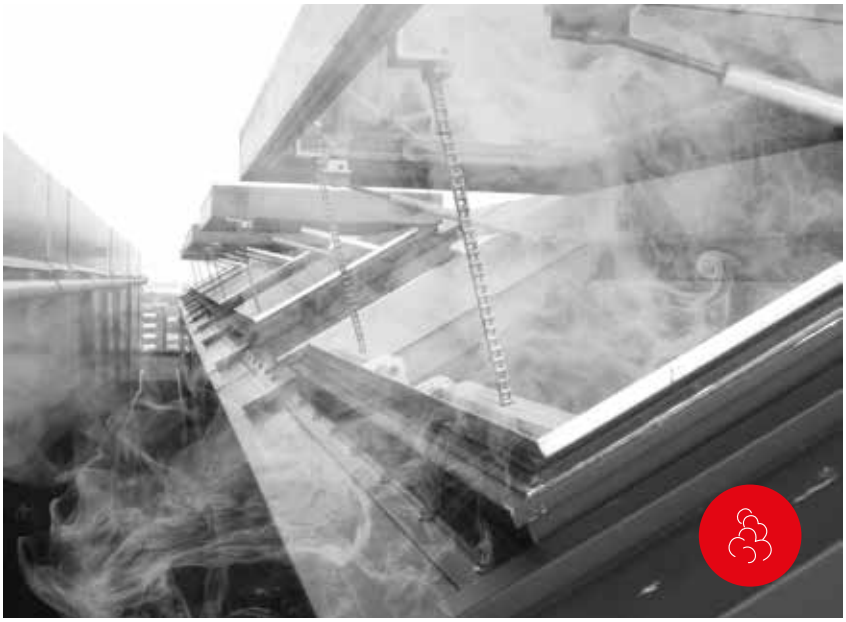

Safety

Smoke & Heat Extraction

Dedicated Control Panels and actuators, tested in fire conditions, operate windows, skylights and louvres to extract smoke.

- Smoke is the principal cause of death in a building on fire
- Emergency exits, escape routes must be free of smoke
- Firemen are able to enter, save lives and extinguish the fire

Fields of application

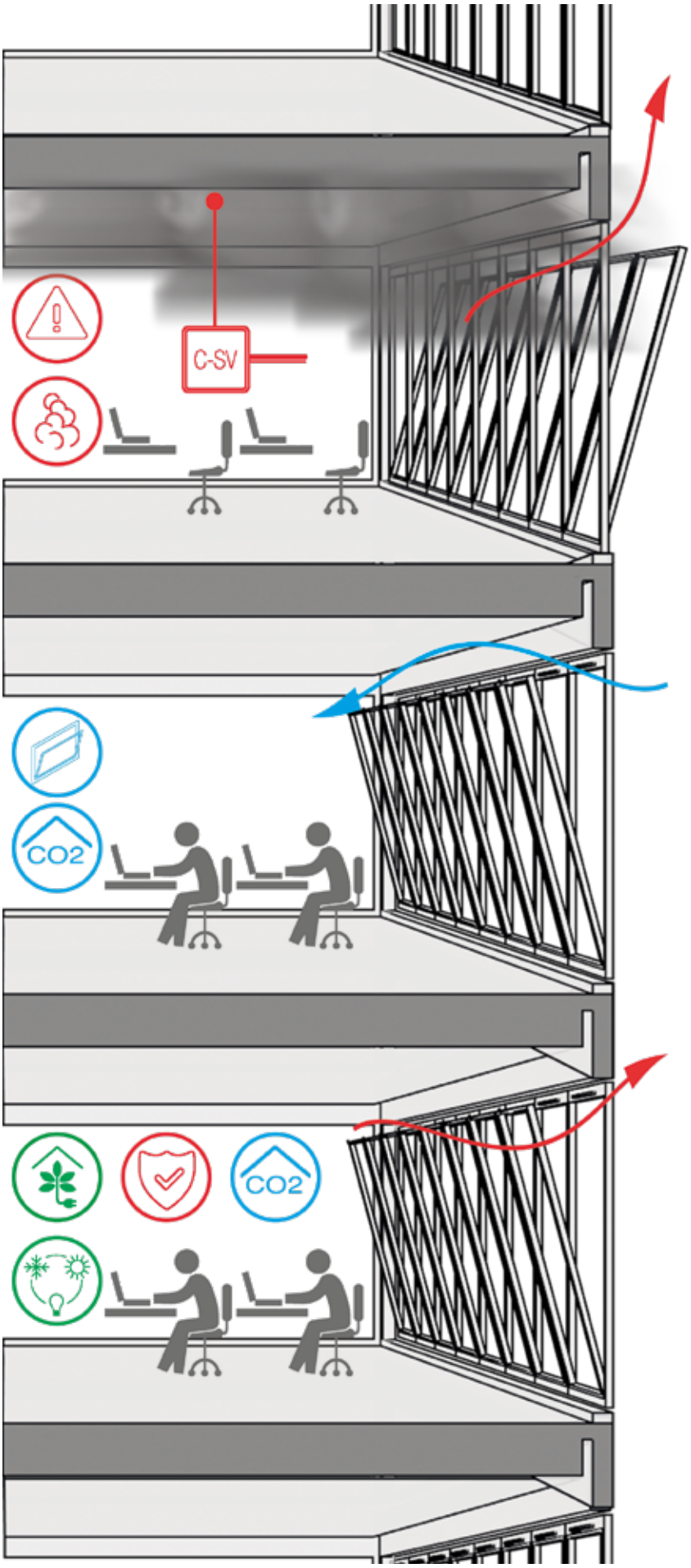

SMOKE VENTILATION

for the safety in the building in case of fire

Dedicated Control Panels, actuators tested in fire conditions able to operate windows, skylights and louvres for smoke extraction.

- Smoke is the first cause of death during a fire in a building
- Emergency exits, escape routes must be free of smoke
- Firemen can enter, save lives and extinguish fire

NATURAL VENTILATION

for healthy indoor environment

The widest choice of solutions for window remote control: manual, electric, pneumatic

- Improving indoor air quality
- Reducing CO2 level
- Reducing Air Conditioning

GREEN BUILDING

for energy saving, comfort and safety in building

By the Integration in Building Management Systems (BMS) the window automation allows:

- **Energy saving** automatic switch-off or reduced use of Air conditioning, heating, lights
- **Comfort in the building** Easy control of window automation through computer or other devices, Quiet operation, Wellbeing that becomes health, then productivity at job place or school

… Granting at the same time safety by smoke ventilation in case of emergency

BMSline

Integrating window automation into Building Management Systems

BMSline programmable and addressable chain actuators

New generation of compact actuators with integrated programmable circuit board, providing two-way communication with computer system. All actuator functions are totally programmable and the actuators provide 100% real-time feedback on their status. Integrating window automation with the BMS Building Management System will enable interaction with other systems in building (HVAC, lighting...) granting considerable energy saving, improving comfort and wellbeing, becoming health and productivity. At the same time the building's safety is assured by smoke ventilation in emergencies.

- Compatible with all existing building management systems
- Continual, totally controlled window with real-time feedback. Not just an ON/OFF operation (open/close)
- Addressable actuators in order to control the environment of each room in a building

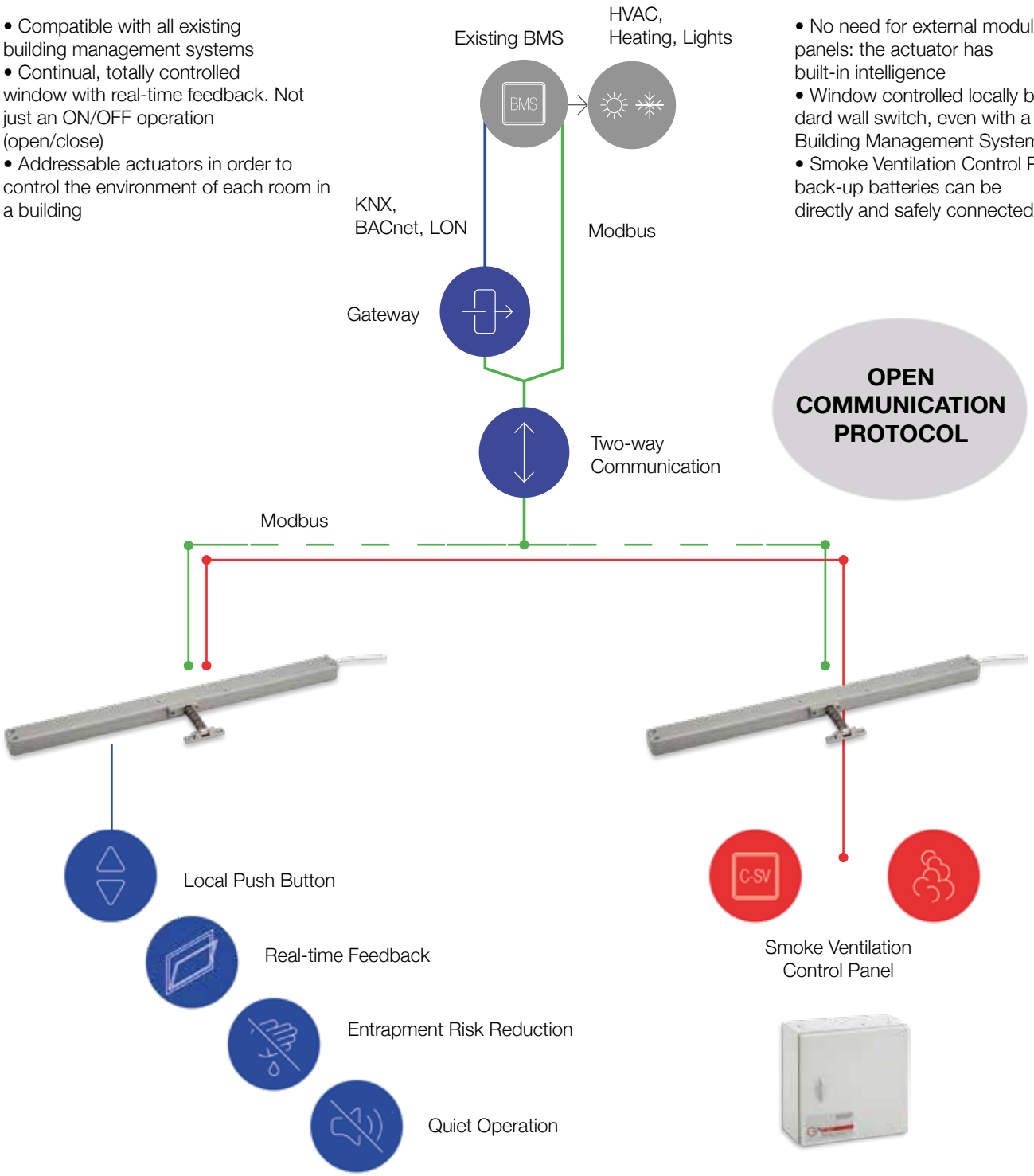

- No need for external modules/control panels: the actuator has built-in intelligence
- Window controlled locally by a standard wall switch, even with a centralized Building Management System
- Smoke Ventilation Control Panels with back-up batteries can be directly and safely connected.

Energy Saving & Wellbeing

Reduced installation & setup cost

Integration in existing BMS

100% safety condition

BMSline

Programmable and adressable chain actuators

The BMSline smart features are available for the QUASAR, VEGA and NANO actuator series (Twin Quasar and Twin Vega included) with 24 Vdc voltage supply.

Programmable parameters
- Stroke
- Percentage of opening and closing action
- Speed, in opening and closing action
- Force, in opening and closing action
- Real close position of the window
- Closing position tolerance
- Soft stop length and speed

Feedback
- Full opening or closing
- Percentage of opening and position of the chain
- Current setting of parameters and scenarios
- Location in the building and address in the network
- Statistics
- Command state
- Eventual Failures

Scenarios
- Reduction of entrapment risk
- Speed synchronization for multiple actuators on the same window
- “Soft” closing of the window
- Quiet operation in case of ventilation and full speed and force for Smoke and Heat Extraction
- Local control of the window even with centralized management

QUASAR is supplied without cable: the installer can access the electronic board for the electrical connection removing the cover on the top of the actuator.
VEGA is supplied with a cable for power, control and BUS communication.

QUASAR BMSline

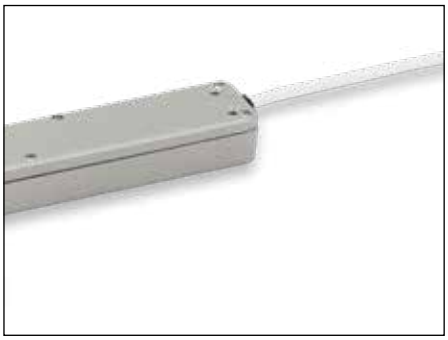

VEGA BMSline

	QUASAR BMSline	VEGA BMSline
VOLTAGE SUPPLY	24 Vdc ± 10%	24 Vdc ± 10%
ACCESS FOR SETUP	removable cover, terminals on circuit board	2x 3 m cable
ELECTRIC CONNECTION	*cable NOT supplied, connection to terminals* 2 wires-voltage supply 3 wires-synchronized (optional) 3 wires-local switch (optional) 2 wires-smoke ventilation (optional)	*3 m cable (8 wires)* 2 wires-voltage supply 3 wires-synchronized (optional) 3 wires-local switch (optional)
BUS COMMUNICATION LINE	*cable NOT supplied, connection to terminals* 5 wires (Modbus RTU-IN/OUT)	*3 m cable (5 cores)* 5 wires (Modbus RTU-IN/OUT)
OPERATION	programmable	programmable
STROKE	programmable up to 500 mm	programmable up to 300 mm
FORCE (push or pull action)	programmable up to 300 N	programmable up to 300 N
SPEED (opening or closing action)	programmable up to 15 mm/s	programmable up to 9 mm/s
CURRENT ABSORPTION (max load)	0,9 A	0,7 A
PARALLEL CONNECTION	YES	YES
LIMIT STOP	Electronic	Electronic
SAFETY STOP	Electronic	Electronic
FEEDBACK SIGNAL	All features via BUS line	All features via BUS line
PROTECTION CLASS	IP 30	IP30
PART No.		
GREY RAL 9006	41564K	41579Z
BLACK RAL 9005	41565L	41580A
WHITE RAL 9010	41566M	41581B

BMSline programmable versions of following actuators are available on request:
QUASAR L 24 Vdc (600 - 750 - 1000 mm) - TWIN QUASAR 24 Vdc (500 mm) - TWIN VEGA 24 Vdc (300 mm) - E-LOCK, see page E-LOCK - NANO, see page NANO

BMSline programmable and addressable chain actuators - Accessories

BMSline Setup Kit Part No. 41587H
User friendly Configuration Software including cable for fast connection between PC (USB connector) and actuators

- Parameters, Scenarios, Setup, Network, Address Assignement
- Actuator Control and Closing Position Adjustment
- Information feedback and diagnostic
- Statistic
- Setup data recording

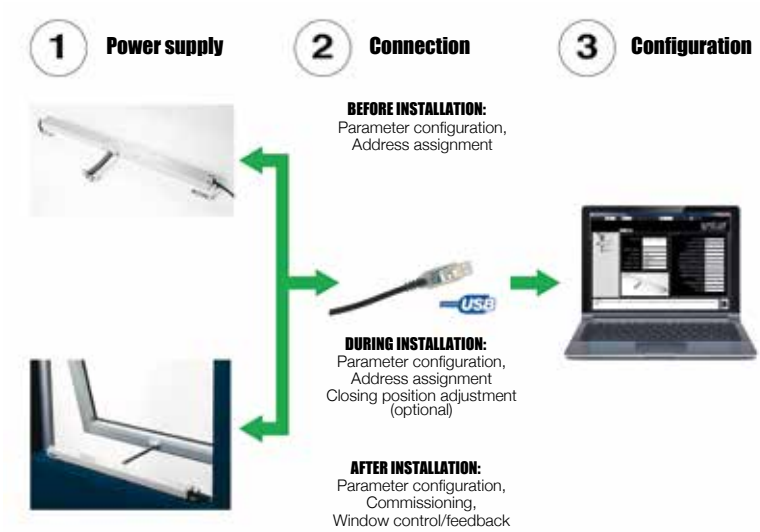

The UCS BMSline Configuration Software works on any computer with Windows XP and following versions

On request, actuators can be configurated in the factory, according to the customer requirements

BMSline Gateway

The BMSline Gateway allows the translation of BMSline communication BUS protocol (Modbus RTU) to other standard BUS languages (BACnet, KNX, Lonworks …).

The gateway behaves like a Modbus master towards the actuators, cyclically polling them and making the information accessible to the target technology (other languages). The process also works in the reverse direction: when the data points of the target technology are changed, the gateway will automatically update the corresponding Modbus registers of the actuators concerned.

The gateway provides a web-type interface that allow to perform configuration and diagnostic operations from any machine provided with network interface and a web browser.
The standards currently supported are:

- BACnet MS/TP - BACnet on RS-485 serial line
- BACnet/IP - BACnet on Ethernet/IP
- KNX TP1 - Konnex protocol on proprietary serial line
- KNXnet/IP - Konnex protocol on Ethernet/IP
- LON TP/FT-10 - CEA-709 standard protocol on TP/FT-10 type interface
- LON/IP - CEA-852 standard protocol on Ethernet/IP

UCS supplies the gateway already equipped with four possible configurations corresponding to 4 different product codes:

GATEWAY MODBUS RTU - LON (both LON TP/FT-10 and LON/IP) – Part No. 41648Q
GATEWAY MODBUS RTU - BACnet (both BACnet MS/TP and BACnet/IP) – Part No. 41649R
GATEWAY MODBUS RTU - KNXnet/IP – Part No. 41650S
GATEWAY MODBUS RTU - KNX TP1 – Part No. 41651T
(To be used with Interface module KNX TP1 - Part No. 41652U)

These devices allow interfacing up to 30 BMSline actuators with Building Management Systems based on protocols other than Modbus RTU

GATEWAY MODBUS RTU – BACnet/IP – Part No. 41888V

This device allows interfacing up to 20 BMSline actuators with Building Management systems based on BACnet/IP

K107A Modbus repeater for RS-485 transmission – Part No. 41624S
The K107A Modbus repeater for RS-485 transmission allows to:
- Extend the network maximum length
- Increase the actuator number on the same line (install one repeater for every group of 30 actuators)
- Create network branches

Moreover:
- The LED lights on the repeater supply a first diagnostic test regarding the network communication state.
- The repeater divides the network in two sections, protecting from communication disturbance, or voltage dispersion that may damage the network.

NOTE: it is always advisable to use a repeater between the master (PC, Server, Gateway etc.) and the remaining part of the network.

BMSline MY-VENT

Natural Ventilation Management System

The MY-VENT system represents the most complete and user friendly solution to provide a building with natural ventilation. By monitoring the changing indoor and outdoor conditions and exploiting the cool air outside, MY-VENT controls any increase in the degree of temperature or C02 level indoors. With sudden changes in weather, showers or gusts of wind, the windows will automatically close to protect the building and interior from damage. In case of emergency all controls are ignored and windows are immediately opened, eventually through UCS Smoke Ventilation Control Panels with battery back-up.

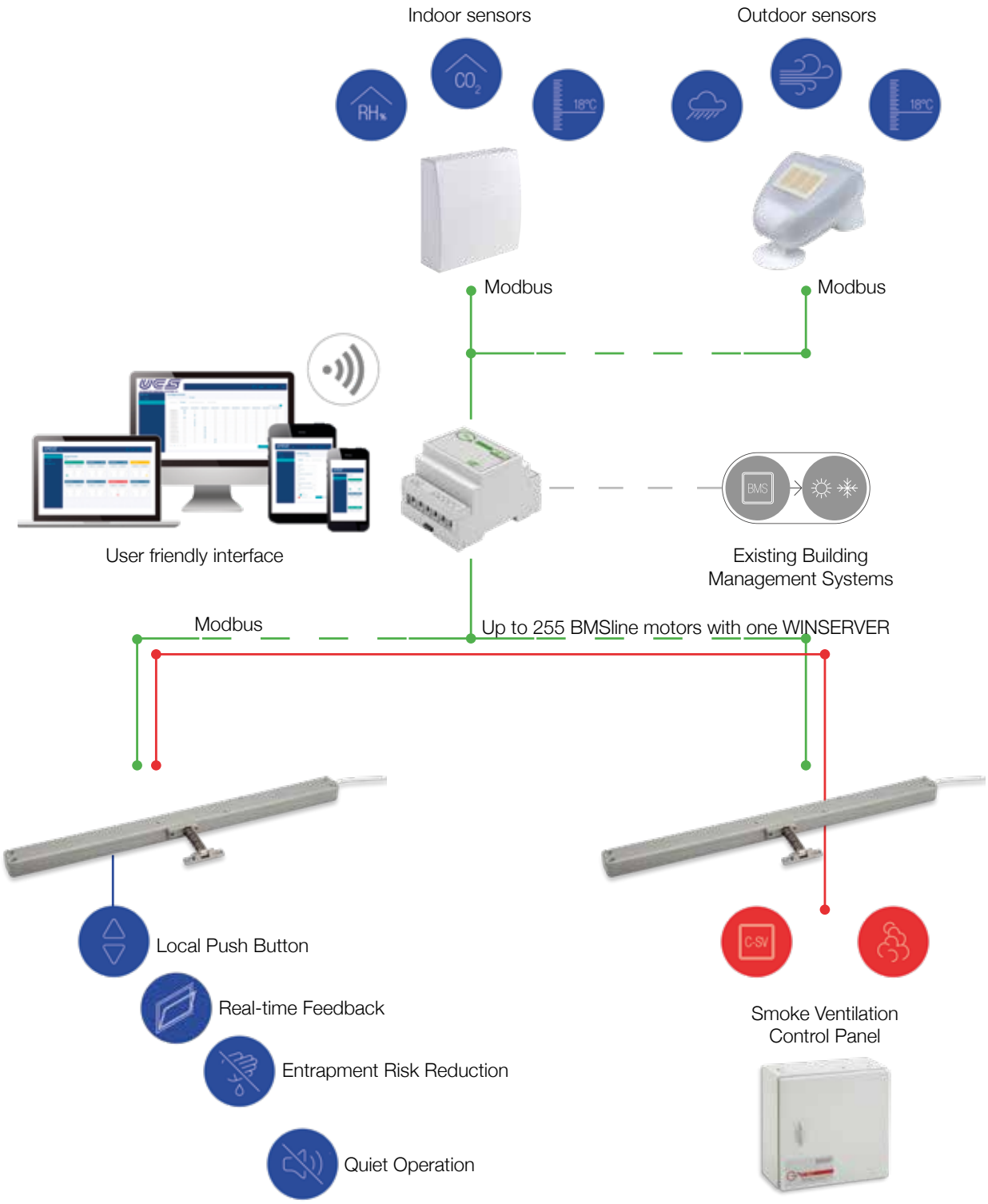

Energy Saving & Wellbeing

Reduced installation & setup cost

Integration in existing BMS

100% safety condition

BMSline MY-VENT

Natural Ventilation Management System

MY-VENT is made by:
- user friendly software
- simple hardware connected via WI-FI to computer, smartphones and tablets
- addressable sensors (internal temperature and humidity, CO2 level)
- addressable weather station (external temperature and humidity, wind and rain)
- BMSline window actuators

Windows easy to control from remote by computer, tablet or smartphone, also distant from the building

Working quietly in daily scenarios, at full speed in emergencies

Total, continual window control with real-time feedback. Not just an on/off operation (open/close)

Addressable system totally compatible with all existing building management systems

Air conditioning or heating automatically switched off if windows are opened

Safety always ensured

BMSline MY-VENT

Natural Ventilation Management System - Scenarios

The windows can be organized into groups to customer requirements. DIFFERENT SCENARIOS can be selected for each single group for total automation or local and/or remote control.
Input and outputs from and to other systems are managed for a complete integration in the building.

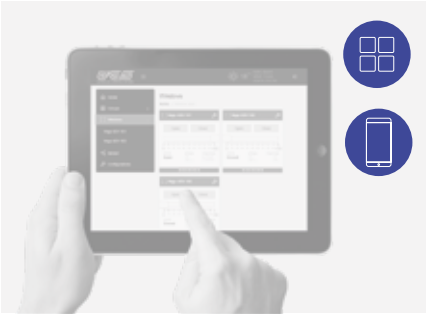

Remote control

For groups of windows in rooms, zones, etc.

Daily comfort ventilation

With continued monitored indoor and outdoor temperature and CO2 concentration, windows are controlled to provide first class living comfort and to save energy.

Local control

The actuator can be manually operated only by the local push button. Continual real-time feedback to MY-VENT.

Night cooling

To avoid or cut down on air conditioning during the day.
With continually monitored indoor and outdoor temperatures, windows are partly opened at night to exploit the cool air from outside, reduce indoor temperature and limit the use of air conditioning.

Micro ventilation

To recycle air and regulate humidity. For a healthy environment, windows are opened a little for air to circulate and to regulate humidity indoors.

Sun blade actuator control

To reduce sun radiation and subsquently regulate light.

12:30

All scenarios can be SET ON A TIME AND DAILY BASIS, but the system can always be used for any temporary need.

Windows will be closed in bad weather conditions, ignoring all other commands. (Apart smoke ventilation).

C-SV

Safety always ensured

BMSline MY-VENT

Natural Ventilation Management System - Components

The user friendly interface, based on web html5, allows the management of the Natural Ventilation, always providing a real feedback of the status of the windows and values from indoor sensors and weather station.

Configuration of group of windows

Configuration of actuator parameters

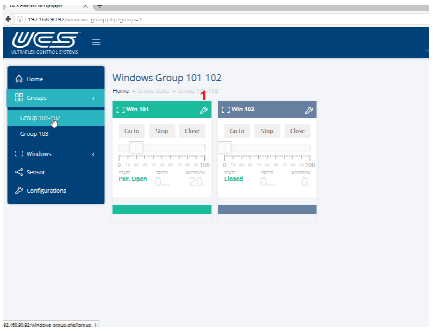

Remote control and real time feedback

BMSline MY-VENT Winserver part No. 41772K

This Control unit offers a direct WI-FI access point for PCs, smartphones and tablets, or can be connected with the LAN installed in the building. BMSline actuators and sensors are connected by means of a special bus line (Modbus RTU).The web based (HTML5) user-interface is accessible in three different levels:

- Installer
- System Administrator
- End user

The Winserver interacts with existing Building Management Systems provided by third parts via Modbus TCP/IP.

Winserver is a DIN rail module, voltage supply 24 Vdc.

Always install 41625S repeater between the Winserver and the Modbus line.

Modbus sensors

Part No.	
41817D	Modbus Weather Station (Wind, Rain, Temperature)
41812Y	Modbus Outdoor sensor (Temperature and Humidity)

41813Z	Modbus Indoor sensor (Temperature)
41814A	Modbus Indoor sensor (Temperature and Humidity)
41815B	Modbus Indoor sensor (Temperature and CO2)
41816C	Modbus Indoor sensor (Temperature, CO2 and Humidity)

NANO

Chain actuator - Force in push action 400 N - Maximum stroke 800 mm

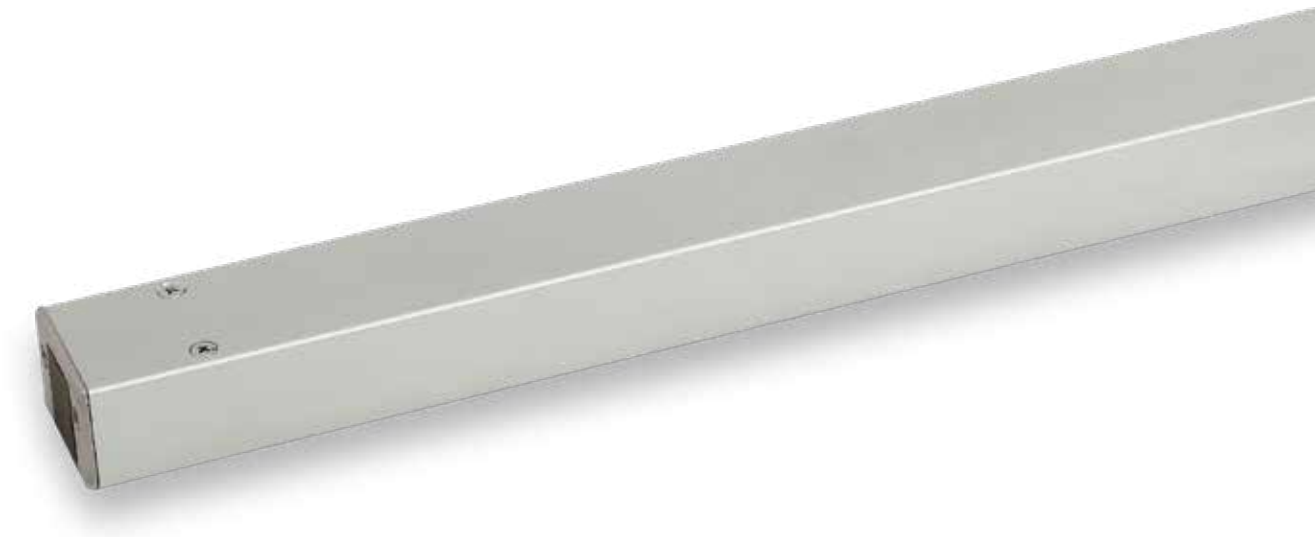

MAIN FEATURES

- The highest performance (400 N) in the smallest case (24 x 35 mm)
- Very silent operation
- Chain in double stainless steel links.
- Aluminum extrusion
- Electronic stop in the intermediate positions in case of overload.

- The **SYNCHRO NANO** versions are equipped with an integrated speed synchronization control board for the installation of more than one actuator on the same vent, avoiding any external control panel (max 4 actuators).
  The quiet operation is ensured by the slow speed for natural ventilation; the maximum speed for smoke ventilation is activated by UCS C-SV Control Panels. SYNCHRO NANO versions provide also open/close feedback. Cable connection possible on both sides.
- The **SYNCHRO NANO F-SIGNAL** versions provide free potential opening and closing feedback signal (maintained contact), activated by the current limit.
- **NANO DC** is provided with 1,5 m cable without selectable features (Synchronization, feedback signal and speed selection).
  The quiet operation is ensured by the slow speed (4 mm/s) for natural ventilation.
  Available on request NANO DC actuators with maximum speed for smoke ventilation systems.
- Suitable for combined installation with the additional locking device E-LOCK (see related data sheet).

OTHER VERSIONS UPON REQUEST:

- **NANO** versions with **IP42** protection class, for a higher resistance against atmospheric agents.

INSTALLATION REMARKS

- In case of vents with four-bar hinges, please contact our Technical Dept.
- If installed on PVC windows, the profile has to be reinforced.
- In case of Building Management System control, avoid repetitive commands in the same direction.

For further information contact our Tech. Dept.

Suitable for installation on **Smoke and Heat Exhaust Ventilators (SHEV)** in conformity to European Standard **EN 12101-2** (pending test).

The BMSline version is fully programmable (stroke, speed, force, ...); different scenarios are selectable with a connection to a computer throught dedicated software. See BMSline section.

THE SOLUTION FOR INTEGRATION INTO THE WINDOW PROFILES

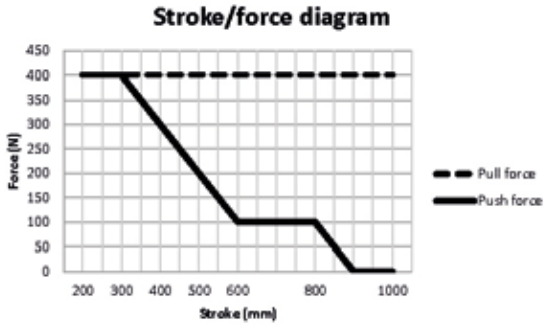

TECHNICAL DATA

	DC VERSION
VOLTAGE SUPPLY	24 Vdc ± 15%
CURRENT ABSORPTION (max load)	1 A
OPERATION	polarity inversion
MAX FORCE	400 N
SPEED	4 - 14 mm/s
DUTY CYCLE	30%
PARALLEL CONNECTION	Yes
LIMIT STOP	Electronic
SAFETY STOP	Electronic
PROTECTION CLASS	IP40

Part No. for DC VERSIONS (24 Vdc ±15%)

MODEL	SYNCHRO	FEEDBACK	CABLE	COLOUR	PART No. *(Stroke)*		
					200 mm	*300 mm*	*400 mm*
NANO DC	-	-	1,5 m 2 wires	SILVER ANODIZED	41944Z	41947C	41950F
				BLACK RAL 9005	41945A	41948D	41951G
				WHITE RAL 9010	41946B	41949E	41952H
					500 mm	*600 mm*	*800 mm*
				SILVER ANODIZED	41953I	41956L	41959O
				BLACK RAL 9005	41954J	41957M	41960P
				WHITE RAL 9010	41955K	41958N	41961Q
					200 mm	*300 mm*	*400 mm*
SYNCHRO NANO DC	Yes	open/close	8 pole connector	SILVER ANODIZED	41962R	41965U	41968X
				BLACK RAL 9005	41963S	41966V	41969Y
				WHITE RAL 9010	41964T	41967W	41970Z
					500 mm	*600 mm*	*800 mm*
				SILVER ANODIZED	41971A	41974D	41977G
				BLACK RAL 9005	41972B	41975E	41978H
				WHITE RAL 9010	41973C	41976F	41979I
					200 mm	*300 mm*	*400 mm*
SYNCHRO NANO DC F-SIGNAL	Yes	free potential open/close	8 pole connector	SILVER ANODIZED	41980J	41983M	41986P
				BLACK RAL 9005	41981K	41984N	41987Q
				WHITE RAL 9010	41982L	41985O	41988R
					500 mm	*600 mm*	*800 mm*
				SILVER ANODIZED	41989S	41992V	41995Y
				BLACK RAL 9005	41990T	41993W	41996Z
				WHITE RAL 9010	41991U	41994X	41997A

NOTE: brackets, electrical connector and cable not included - to be ordered separately

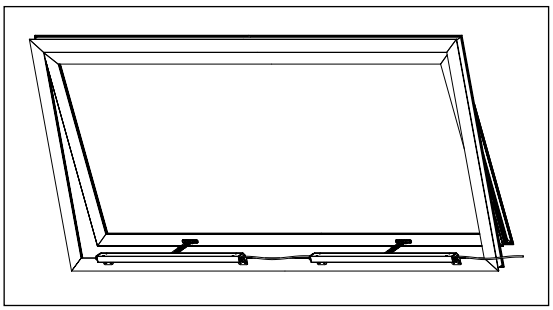

SYNCHRO NANO DC
Installation on top hinged windows, with cable with 2 connectors between the actuators

Actuators dimensions

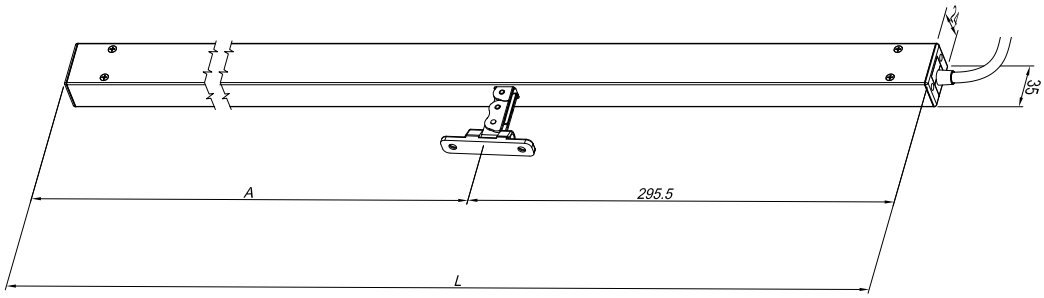

STROKE	A	L
200	254,5	550
300		
400	304,5	600
500	404,5	700
600		
800	604,5	900
1000		

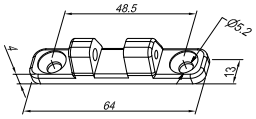

Connector included

Accessories - Brackets

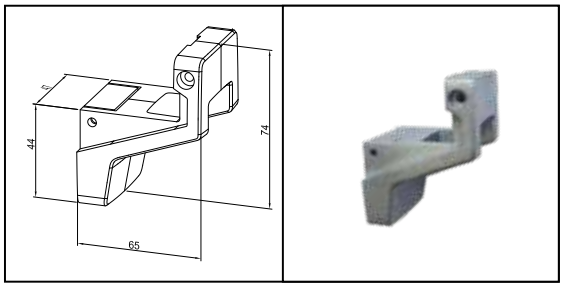

Aluminum bracket for bottom hinged windows:
GREY part no. 41941W
BLACK part no. 41942X
WHITE part no. 41943Y

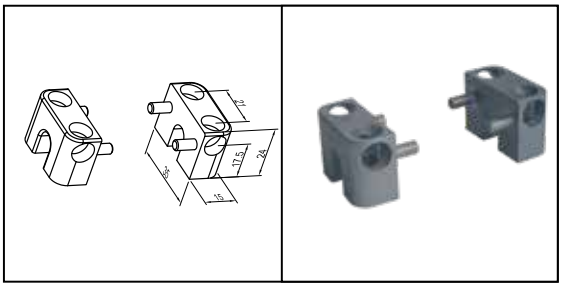

Side bracket kit:
GREY part no. 41938T
BLACK part no. 41939U
WHITE part no. 41940V

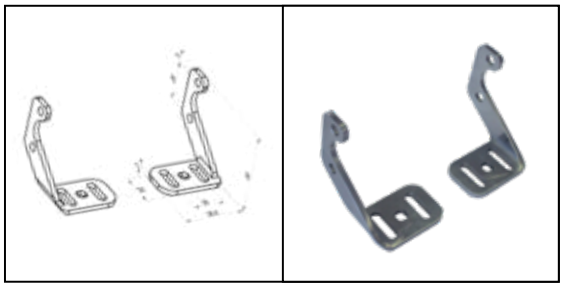

Front bracket kit:
GREY part no. 41935Q
BLACK part no. 41936R
WHITE part no. 41937S

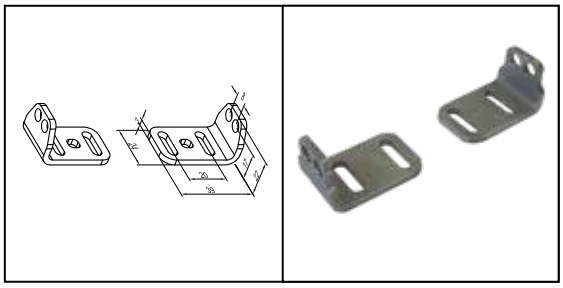

Back bracket kit:
GREY part no. 41932N
BLACK part no. 41933O
WHITE part no. 41934P

Accessories - Electrical connectors and cables

42016T Electrical Connector with 1,5 m cable (white) for SYNCHRO NANO DC

42017U Electrical Connector with 1,5 m cable (black) for SYNCHRO NANO DC

42020X Electrical Connector with 1,5 m cable (white) for SYNCHRO NANO DC F-SIGNAL

42021Y Electrical Connector (without cable) for SYNCHRO NANO DC and SYNCHRO NANO DC F-SIGNAL

42018V Cable with 2 connectors (1m, white) for installations of 2 x SYNCHRO NANO DC actuators.

42019W Cable with 2 connectors (1m, black) for installations of 2 x SYNCHRO NANO DC actuators.

Installation examples

Top hinged windows

Top hinged windows, two Synchro actuators

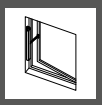

Side hinged windows

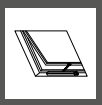

Roof windows

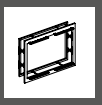

Parallel windows

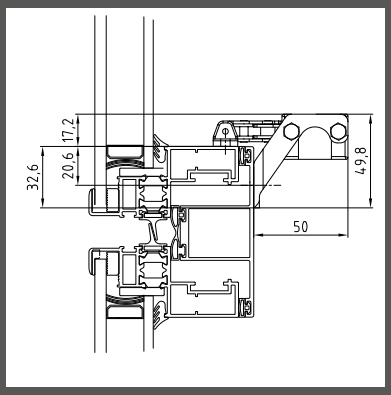

Concealed vent with front bracket

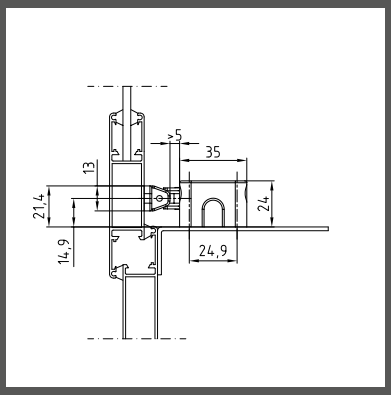

On windowsill with side brackets

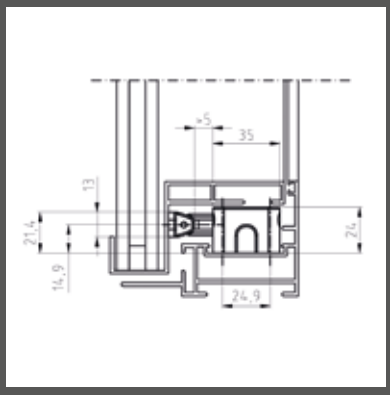

Integrated into window profiles with side brackets

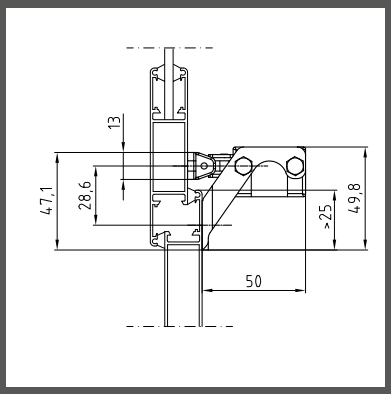

With front brackets

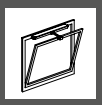

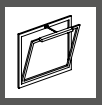

Bottom hinged windows

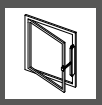

Side hinged windows

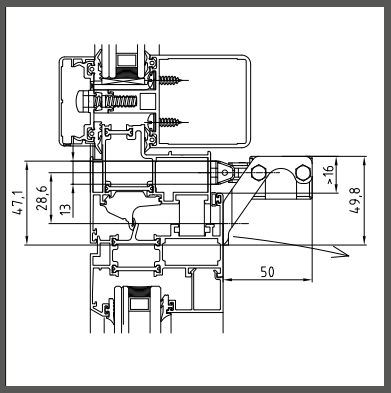

On the vent with front brackets

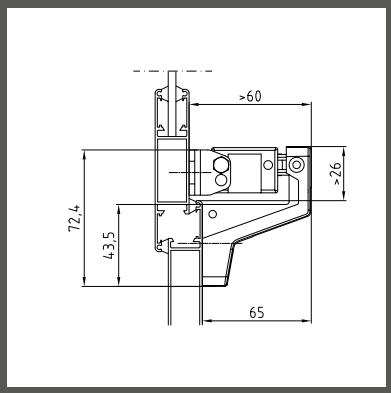

On the frame with back brackets and aluminum “Z” bracket

⚠ The instructions for a safe installation are included in the section “SECURITY WARNINGS”

SPECIFICATION PROSPECTS

Electric chain actuator Ultraflex Control Systems named Nano DC with chain in double stainless steel links. High performance (400 N) in very small case (24 x 35 mm). Voltage supply: 24 Vdc – Electronic limit stop; electronic stop in the intermediate positions in case of overload. Electric chain actuator Ultraflex Control Systems named Synchro Nano DC with chain in double stainless steel links. High performance (400 N) in very small case (24 x 35 mm). Voltage supply: 24 Vdc – Electronic limit stop; electronic stop in the intermediate positions in case of overload. Suitable for mounting more than one actuators (max 4 actuators) on the same vent: integrated speed synchronization. When “free potential open/close feedback” is required, indicate suffix “F-SIGNAL”

QUASAR

Chain actuator - Force in push action 300 N - Maximum stroke 500 mm

MAIN FEATURES

- High performance in small die-cast aluminum casing (47 x 32 mm), powder painted.
- Chain in double stainless steel links.
- Chain exit in central position.
- Quick and easy installation: the manual closing position regulation is not required.
  The stop in closing position is regulated by an electronic limit switch control.
- Electronic stop in the intermediate positions in case of overload.

- **SYNCHRO** versions are equipped with an integrated speed synchronization control board for the installation of more than one actuator on the same vent, avoiding any external control panel.
  AC version: 1 Synchro Quasar AC + 1 Synchro Quasar DC (max 2 couples), **DC version**: max 4 Synchro Quasar DC.
- **F-SIGNAL** versions provide opening and closing feedback signal (free potential, maintained contact), activated by the current limit.
- Suitable for combined installation with the additional locking device **E-LOCK** or **PLUSULTRA** (see related data sheet).
- **DRAWBRIDGE** version is suitable for installation on bottom hinged windows, opening outwards 90°, for Smoke Ventilation.

OTHER VERSIONS UPON REQUEST:

- **QUASAR DC** version with **IP42** protection class, for a higher resistance against atmospheric agents.
- Versions for USA and Canada.

INSTALLATION REMARKS

- The installation without brackets is possible for windows with pivoting hinges only if the vent height is at least 1500 mm.
- In case of vents with four-bar hinges, please contact our Technical Dept.
- If installed on PVC windows, the profile has to be reinforced.
- In case of Building Management System control, avoid repetitive commands in the same direction.

For further information contact our Tech. Dept.

24 Vdc version is suitable for installation on **Smoke and Heat Exhaust Ventilators (SHEV)** in conformity to European Standard **EN 12101-2**, tested by Istituto Giordano.

The Quasar BMSline version is fully programmable (stroke, speed, force, ...); different scenarios are selectable with a connection to a computer throught dedicated software. See BMSline section.

TECHNICAL DATA

	AC VERSION	DC VERSION
VOLTAGE SUPPLY	100 Vac - 240 Vac	24 Vdc ± 10%
CURRENT ABSORPTION (max load)	0,4 A - 0,2 A	0,9 A
OPERATION	-	polarity inversion
MAX FORCE	300 N	300 N
SPEED	~15 mm/s	~15 mm/s
LOCKING FORCE	2500 N	2500 N
DUTY CYCLE	50%	50%
PARALLEL CONNECTION	Yes	Yes
LIMIT STOP	Electronic	Electronic
SAFETY STOP	Electronic	Electronic
PROTECTION CLASS	IP40	IP40

Part No. for AC VERSIONS (100 Vac - 240 Vac)

MODEL	STROKE	SYNCHRO	FEEDBACK	CABLE	COLOUR	PART No.
QUASAR AC	500 mm	-	-	1,5 m 3 wires + earth	GREY RAL 9006 BLACK RAL 9005 WHITE RAL 9010	40837Z 40838A 40839B
SYNCHRO QUASAR AC	500 mm	Yes	-	2 x 3 m cables: 3 wires + earth 5 wires	GREY RAL 9006 BLACK RAL 9005 WHITE RAL 9010	41316I 41317J 41318K

Part No. for DC VERSIONS (24 Vdc ±10%)

MODEL	STROKE	SYNCHRO	FEEDBACK	CABLE	COLOUR	PART No.
QUASAR DC	500 mm	-	-	1,5 m 2 wires	GREY RAL 9006 BLACK RAL 9005 WHITE RAL 9010	40840C 40841D 40842E
SYNCHRO QUASAR DC	500 mm	Yes	-	3 m 5 wires	GREY RAL 9006 BLACK RAL 9005 WHITE RAL 9010	41119Z 41120A 41121B
QUASAR DC F-SIGNAL	500 mm	-	free potential open/close	1,5 m 5 wires	GREY RAL 9006 BLACK RAL 9005 WHITE RAL 9010	41327T 41328U 41329V
SYNCHRO QUASAR DC F-SIGNAL	500 mm	Yes	free potential open/close	2 x 3 m cables: 5 wires 3 wires	GREY RAL 9006 BLACK RAL 9005 WHITE RAL 9010	41319L 41320M 41321N
SYNCHRO QUASAR DC DRAWBRIDGE	500 mm	Yes	-	3 m 5 wires	GREY RAL 9006 BLACK RAL 9005 WHITE RAL 9010	41928J 41929K 41930L

NOTE: brackets not included - to be ordered separately

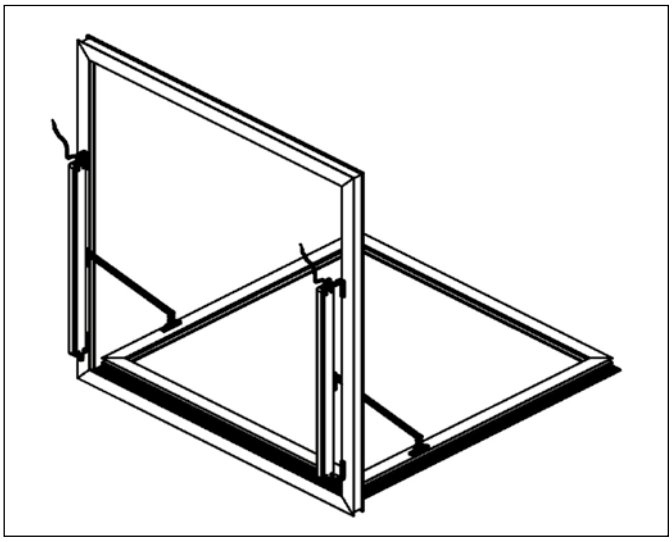

SYNCHRO QUASAR DC DRAWBRIDGE
Installation on bottom hinged window, opening outwards 90°: The actuators are equipped with a special guide for the chain. Contact our Technical Department for the installation limits (size and weight of window) and brackets for actuator installation (depending on type of profile)

Actuator dimensions

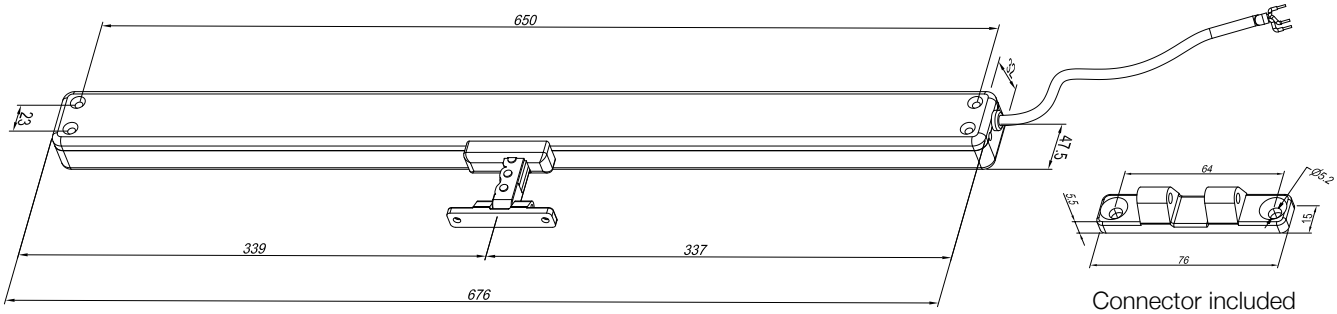

Connector included

Accessories

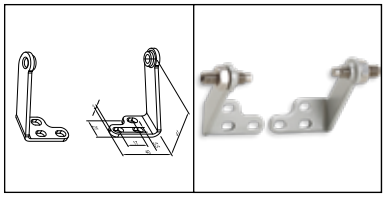

Long slim bracket kit
GREY RAL 9006 part no. 41898F
BLACK RAL 9005 part no. 41899G
WHITE RAL 9010 part no. 41900H

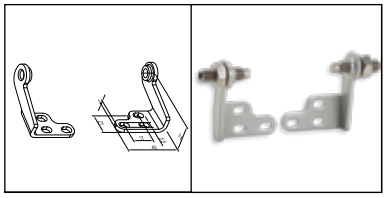

Short slim bracket kit
GREY RAL 9006 part no. 41901I
BLACK RAL 9005 part no. 41902J
WHITE RAL 9010 part no. 41903K

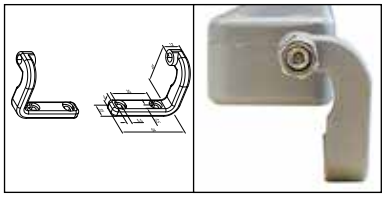

Die-cast bracket kit
GREY RAL 9006 part no. 40843F
BLACK RAL 9005 part no. 40844G
WHITE RAL 9010 part no. 40845H

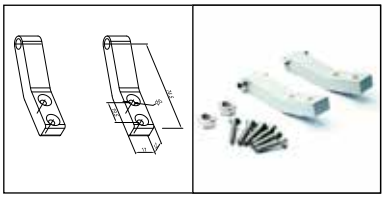

Long bracket kit
GREY RAL 9006 part no. 40941H
BLACK RAL 9005 part no. 40942I
WHITE RAL 9010 part no. 40943J

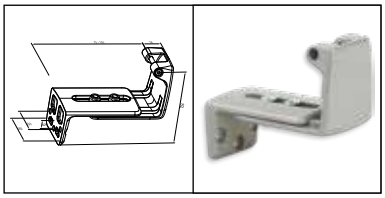

Aluminum adjustable “Z” bracket for bottom hinged windows
GREY part no. 41709Z
BLACK part no. 41710A
WHITE part no. 41711B

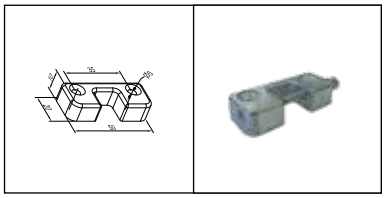

Flat connector (alternative)
GREY part no. 84793Z

Installation examples

Top hinged windows

Top hinged windows, two Synchro actuators

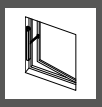

Side hinged windows

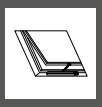

Roof windows

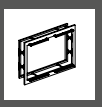

Parallel windows

Drawbridge windows

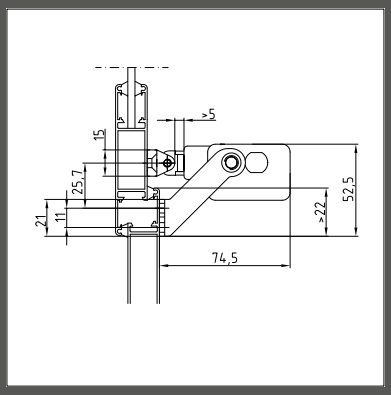

Front installation with long slim bracket

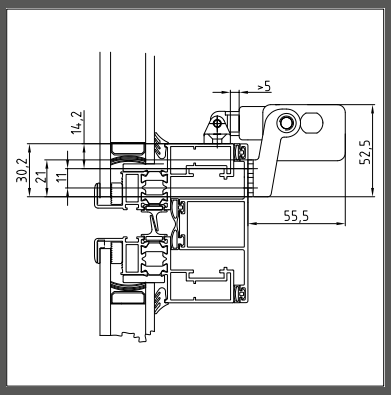

Concealed vent with short slim bracket

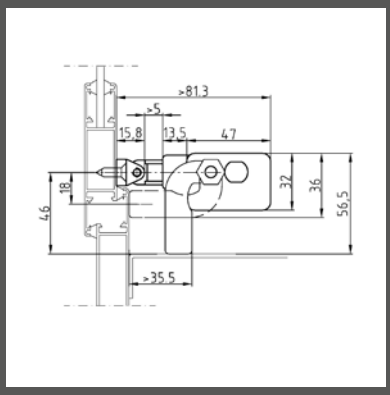

With or without windowsill, with die-cast bracket

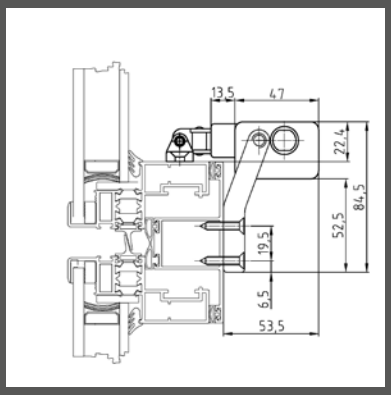

With long bracket kit

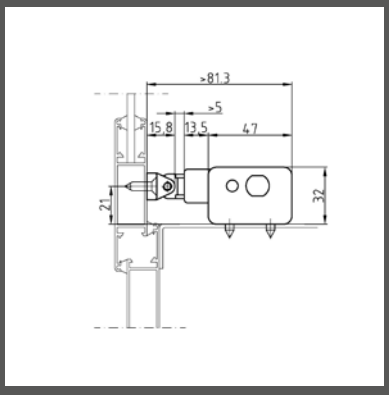

On windows with windowsill

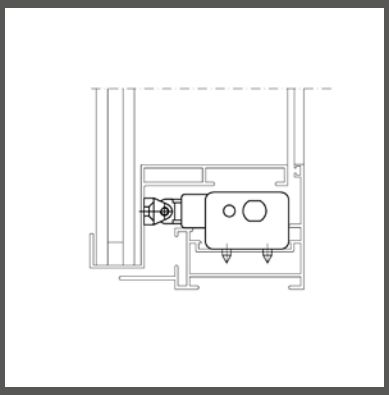

Inside a curtain wall frame

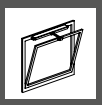

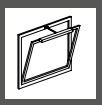

Bottom hinged windows

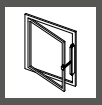

Side hinged windows

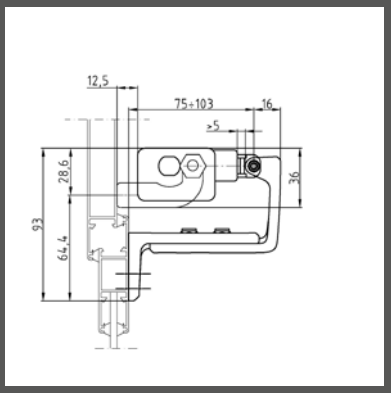

On the frame with adjustable "Z" bracket

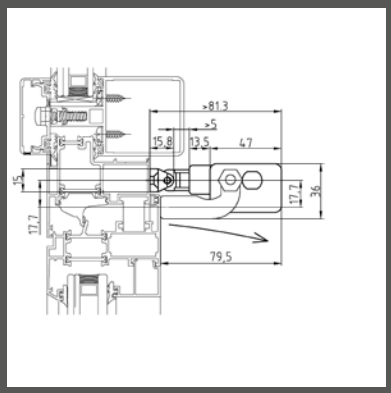

On the vent with die-cast bracket

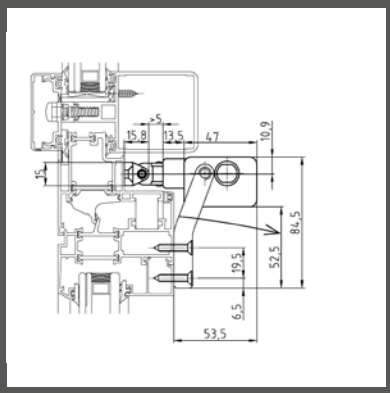

On the vent with long bracket kit

⚠ The instructions for a safe installation are included in the section “SECURITY WARNINGS”

SPECIFICATION PROSPECTS

Electric chain actuator Ultraflex Control Systems named Quasar with chain in double stainless steel links.
Voltage supply: from 100 to 240 Vac or 24 Vdc – Electronic limit stop; electronic stop in the intermediate positions in case of overload. Casing in painted die-cast aluminium with very small section (47x32 mm).

Electric chain actuator Ultraflex Control Systems named Synchro-Quasar with chain in double stainless steel links. Suitable for mounting more than one actuators (max 4 actuators) on the same vent: integrated speed synchronization
Voltage supply: from 100 to 240 Vac or 24 Vdc – Electronic limit stop; speed control; electronic stop in the intermediate positions in case of overload. Casing in painted die-cast aluminium with very small section (47x32 mm).
When “free potential open/close feedback” is required, indicate suffix “F-SIGNAL”

QUASAR L

Chain actuator - Force in push action 300-150-100 N - Stroke 600-750-1000 mm

MAIN FEATURES

- Available 3 different strokes: 600 mm - 750 mm - 1000 mm.
- Chain in double stainless steel links.
- Anodized (silver) or painted (white or black) aluminum casing.
- Quick and easy installation: the manual closing position regulation is not required.
  The stop in closing position is regulated by an electronic limit switch control.
- Electronic stop in the intermediate positions in case of overload.
- Easy replacement of the cable in case a different / longer cable or a different colour is required; upon request it is possible to supply actuators with cable exit by the opposite side.
- Supplied with 3 m cable and pivoting brackets for top hinged windows.

- **SYNCHRO** versions are equipped with an integrated speed synchronization control board for the installation of more than one actuator on the same vent, avoiding any external control panel.
  AC version: 1 Synchro Quasar L AC + 1 Synchro Quasar L DC (max 2 couples), **DC version**: max 4 Synchro Quasar L DC.
- **F-SIGNAL** versions provide opening and closing feedback signal (free potential, maintained contact), activated by the current limit.
- Suitable for combined installation with the additional locking device **E-LOCK** or **PLUSULTRA** (see related data sheet).

OTHER VERSIONS UPON REQUEST:

- **QUASAR L DC** version with **IP42** protection class, for a higher resistance against atmospheric agents.
- Versions for USA and Canada.

INSTALLATION REMARKS

- In case of vents with four-bar hinges, please contact our Technical Dept.
- If installed on PVC windows, the profile has to be reinforced.
- In case of Building Management System control, avoid repetitive commands in the same direction.

For further information contact our Tech. Dept.

24 Vdc version is suitable for installation on **Smoke and Heat Exhaust Ventilators (SHEV)** in conformity to European Standard **EN 12101-2**, tested by Istituto Giordano.

The Quasar BMSline version is fully programmable (stroke, speed, force, ...); different scenarios are selectable with a connection to a computer throught dedicated software. See BMSline section.

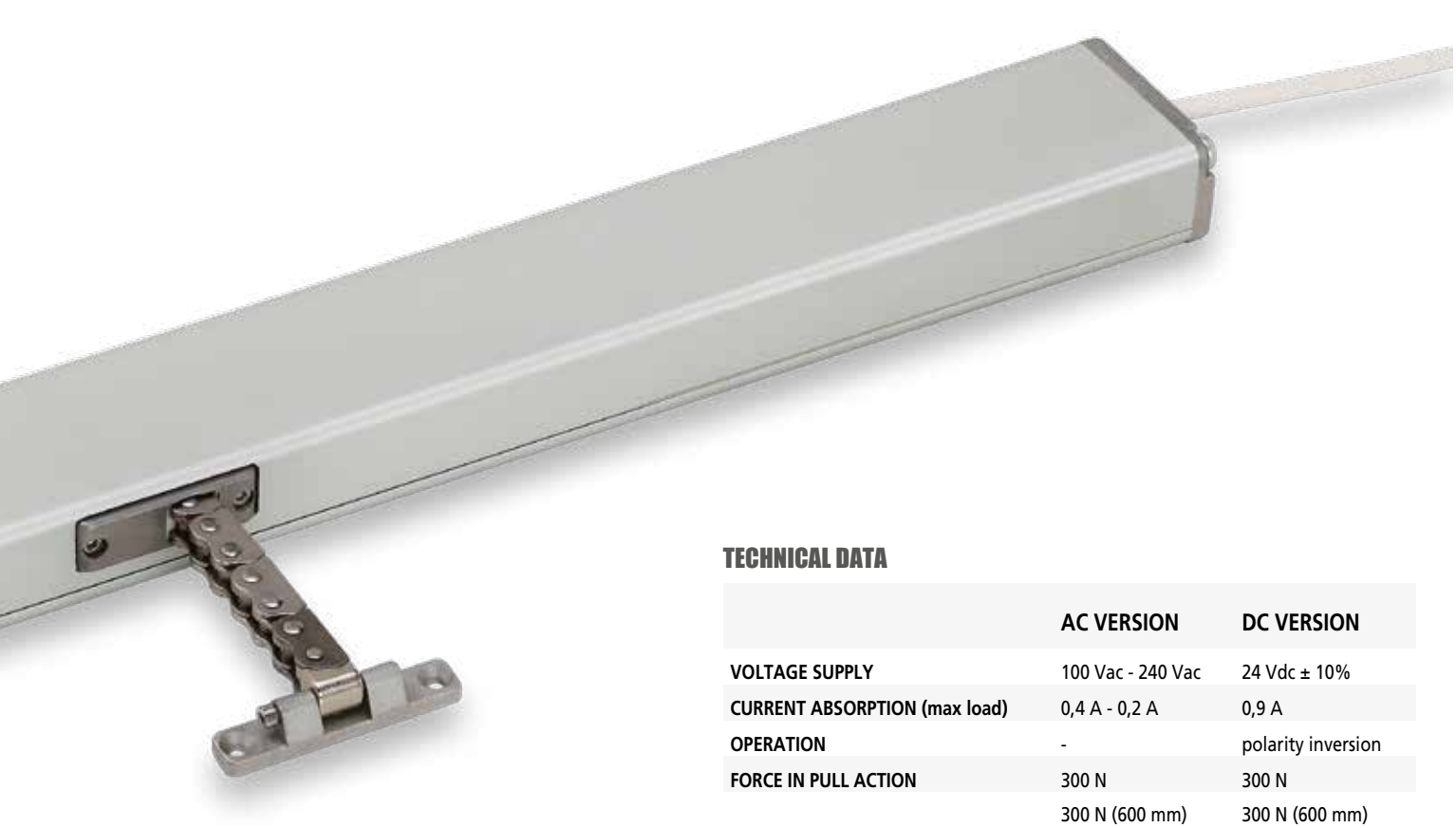

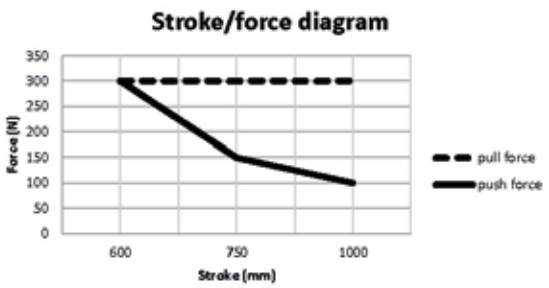

TECHNICAL DATA

	AC VERSION	DC VERSION
VOLTAGE SUPPLY	100 Vac - 240 Vac	24 Vdc ± 10%
CURRENT ABSORPTION (max load)	0,4 A - 0,2 A	0,9 A
OPERATION	-	polarity inversion
FORCE IN PULL ACTION	300 N	300 N
FORCE IN PUSH ACTION (stroke)	300 N (600 mm) 150 N (750 mm) 100 N (1000 mm)	300 N (600 mm) 150 N (750 mm) 100 N (1000 mm)
SPEED	~15 mm/s	~15 mm/s
LOCKING FORCE	3500 N	3500 N
DUTY CYCLE	50%	50%
PARALLEL CONNECTION	Yes	Yes
LIMIT STOP	Electronic	Electronic
SAFETY STOP	Electronic	Electronic
PROTECTION CLASS	IP40	IP40

Part No. for AC VERSIONS (100 Vac - 240 Vac)

MODEL	SYNCHRO	FEEDBACK	CABLE	COLOUR	PART No. *(Stroke)*		
					600 mm	*750 mm*	*1000 mm*
QUASAR L AC	-	-	3 m 3 wires + earth	SILVER ANODIZED BLACK RAL 9005 WHITE RAL 9010	41052C 41053E 41054G	41055J 41056L 41057N	41058R 41059T 41060B
					600 mm	*750 mm*	*1000 mm*
SYNCHRO QUASAR L AC	Yes	-	2 x 3 m cables: 3 wires + earth 5 wires	SILVER ANODIZED BLACK RAL 9005 WHITE RAL 9010	41286E 41287F 41288G	41289H 41290I 41291J	41292K 41293L 41294M

Part No. for DC VERSIONS (24 Vdc ±10%)

MODEL	SYNCHRO	FEEDBACK	CABLE	COLOUR	PART No. *(Stroke)*		
					600 mm	*750 mm*	*1000 mm*
QUASAR L DC	-		3 m 2 wires	SILVER ANODIZED BLACK RAL 9005 WHITE RAL 9010	41061D 41062F 41063H	41064K 41065M 41066P	41067S 41068U 41069W
					600 mm	*750 mm*	*1000 mm*
SYNCHRO QUASAR L DC	Yes		3 m 5 wires	SILVER ANODIZED BLACK RAL 9005 WHITE RAL 9010	41189G 41190R 41191T	41212I 41240K 41241L	41242M 41243N 41244O
					600 mm	*750 mm*	*1000 mm*
QUASAR L DC F-SIGNAL	-	free potential open/close	3 m 5 wires	SILVER ANODIZED BLACK RAL 9005 WHITE RAL 9010	41277V 41278W 41279X	41280Y 41281Z 41282A	41283B 41284C 41285D
					600 mm	*750 mm*	*1000 mm*
SYNCHRO QUASAR L DC F-SIGNAL	Yes	free potential open/close	2 x 3 m cables: 5 wires 3 wires	SILVER ANODIZED BLACK RAL 9005 WHITE RAL 9010	41295N 41296O 41297P	41298Q 41299R 41300S	41301T 41302U 41303V

NOTE: brackets not included - to be ordered separately

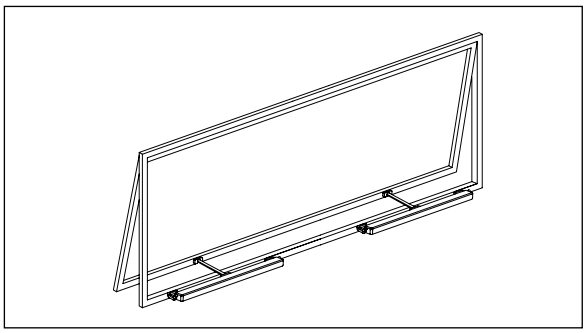

Synchro Quasar L installation examples

STROKE	A	L
600	400,3	759
750	475,3	834
10000	600,3	959

Actuator dimensions

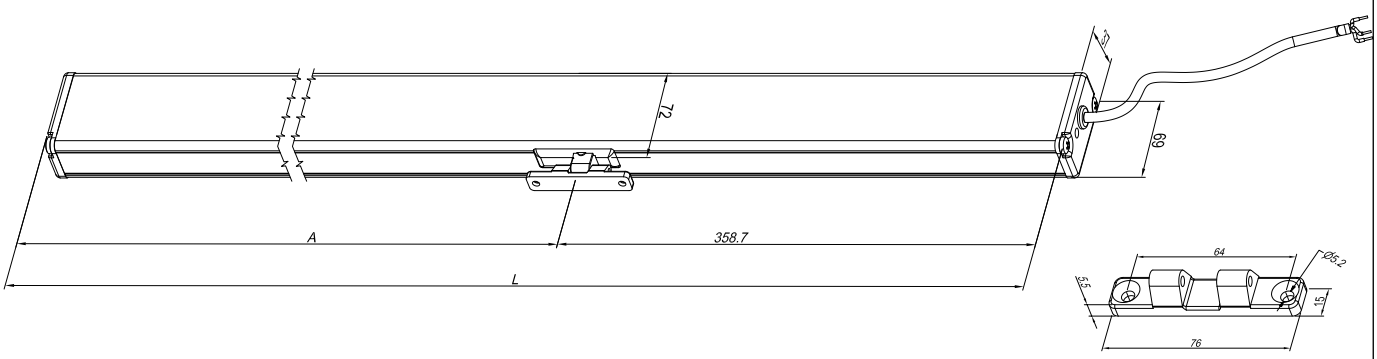

Connector included

Accessories

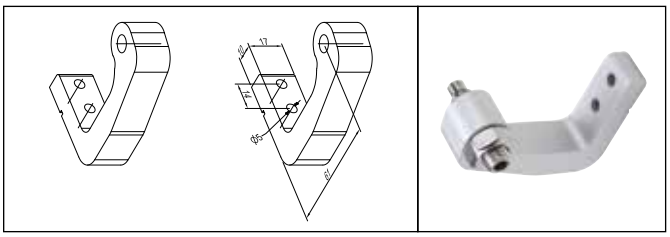

"C" pivoting brackets (to be ordered separately):
GREY anodized aluminium part No. 41197Z
BLACK RAL 9005 part No. 41198A
WHITE RAL 9010 part No. 41199B

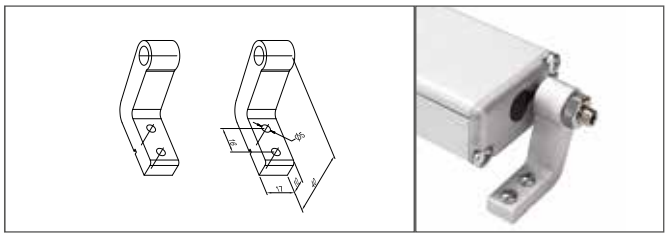

Pivoting brackets (to be ordered separately)
GREY part No. 41906N
BLACK part No. 41907O
WHITE part No. 41908P

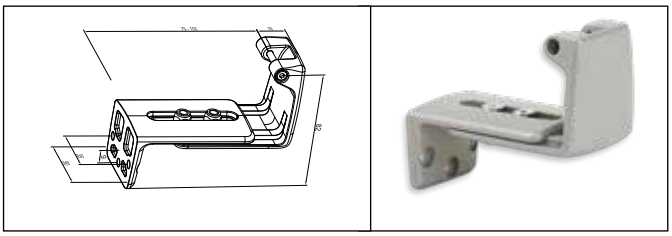

Aluminium adjustable "Z" bracket for bottom hinged window
GREY part No. 41709Z
BLACK part No. 41710A
WHITE part No. 41711B

Kit for bottom hinged window with "C" pivoting brackets and aluminium adjustable "Z" bracket (to be ordered separately):
GREY anodized aluminium part No. 41715F
BLACK RAL 9005 part No. 41716G
WHITE RAL 9010 part No. 41717H

Installation examples

Top hinged windows

Top hinged windows, two Synchro actuators

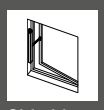

Side hinged windows

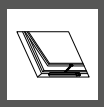

Roof windows

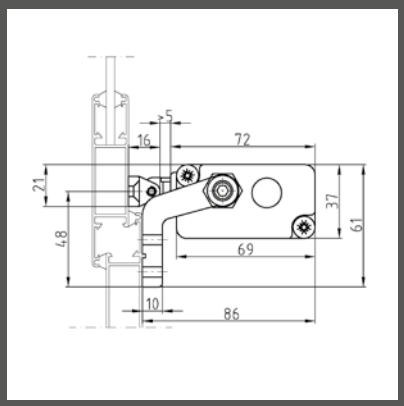

On the frame with pivoting brackets

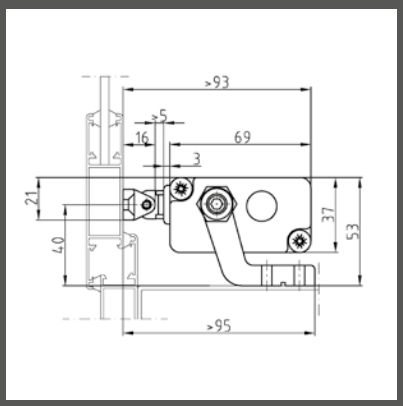

On windowsill with pivoting brackets

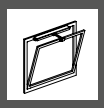

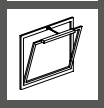

Bottom hinged windows

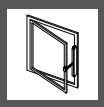

Side hinged windows

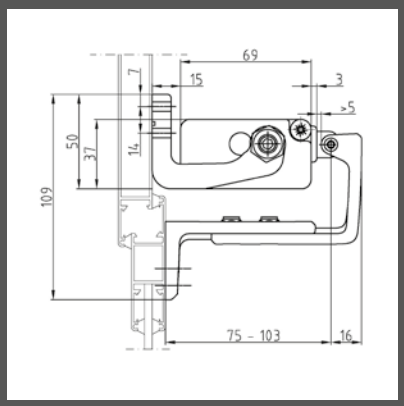

On the frame with brackets for bottom hinged windows

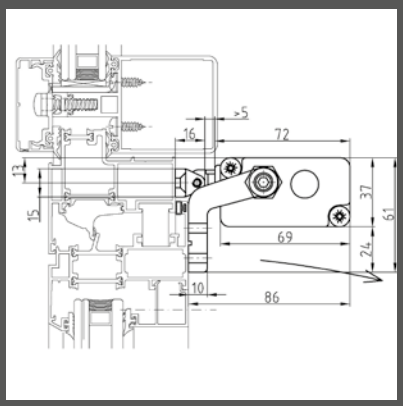

On the vent with pivoting brackets

⚠ The instructions for a safe installation are included in the section “SECURITY WARNINGS”

SPECIFICATION PROSPECTS

Electric chain actuator Ultraflex Control Systems named Quasar L with chain in double stainless steel links.
Voltage supply: from 100 to 240 Vac or 24 Vdc – Electronic limit stop; electronic stop in the intermediate positions in case of overload.
Casing in aluminium: Anodized (silver) or painted (white or black).

Electric chain actuator Ultraflex Control Systems named Synchro-Quasar L with chain in double stainless steel links. Suitable for mounting more than one actuator (max 4 actuators) on the same vent.
Voltage supply: from 100 to 240 Vac or 24 Vdc – Electronic limit stop; speed control; electronic stop in the intermediate positions in case of overload. Casing in aluminium: Anodized (silver) or painted (white or black).

VEGA

Chain actuator - Force in push action 300 N - Maximum stroke 300 mm

MAIN FEATURES

- High performance in small die-cast aluminum casing (45 x 32 mm), powder painted.
- Chain in double stainless steel links.
- Chain exit in central position.
- Quick and easy installation: the manual closing position regulation is not required.
  The stop in closing position is regulated by an electronic limit switch control.
- Electronic stop in the intermediate positions in case of overload.

- **RF** version has an integrated radio receiver and it is supplied with radio remote control; the transmitter controls simultaneosly all actuators within its field of action. Availbale on request actuators and remote controls with different radio codes.
- **SYNCHRO** versions are equipped with an integrated speed synchronization control board for the installation of more than one actuator on the same vent, avoiding any external control panel: max 4 Synchro Vega DC.
- **F-SIGNAL** versions provide opening and closing feedback signal (free potential, maintained contact), activated by the current limit.
- Suitable for combined installation with the additional locking device **E-LOCK** or **PLUSULTRA** (see related data sheet).

OTHER VERSIONS UPON REQUEST:

- **VEGA DC** version with **IP32** protection class, for a higher resistance against atmospheric agents.
- Versions for USA and Canada.

INSTALLATION REMARKS

- The installation without brackets is possible for windows with pivoting hinges only if the vent height is at least 900 mm.
- In case of vents with four-bar hinges, please contact our Technical Dept.
- If installed on PVC windows, the profile has to be reinforced.
- In case of Building Management System control, avoid repetitive commands in the same direction.

For further information contact our Tech. Dept.

24 Vdc version is suitable for installation on **Smoke and Heat Exhaust Ventilators (SHEV)** in conformity to European Standard **EN 12101-2**, tested by Istituto Giordano.

The Vega BMSline version is fully programmable (stroke, speed, force, ...); different scenarios are selectable with a connection to a computer throught dedicated software. See BMSline section.

TECHNICAL DATA

	AC VERSION	DC VERSION
VOLTAGE SUPPLY	100 Vac - 240 Vac	24 Vdc ± 10%
CURRENT ABSORPTION (max load)	0,3 A - 0,15 A	0,7 A
OPERATION	-	polarity inversion
MAX FORCE	300 N	300 N
STROKE	300 mm	300 mm
SPEED	~9 mm/s	~9 mm/s
LOCKING FORCE	2500 N	2500 N
DUTY CYCLE	50%	50%
PARALLEL CONNECTION	Yes	Yes
LIMIT STOP	Electronic	Electronic
SAFETY STOP	Electronic	Electronic
PROTECTION CLASS	IP30	IP30

Part No. for AC VERSIONS (100 Vac - 240 Vac)

MODEL		SYNCHRO	FEEDBACK	CABLE	COLOUR	PART No.
VEGA AC		-	-	1,5 m 3 wires + earth	GREY RAL 9006 BLACK RAL 9005 WHITE RAL 9010	40900K 40901L 40902M
VEGA RF	Integrated radio receiver Remote control included	-	-	1,5 m 4 wires + earth	GREY RAL 9006 BLACK RAL 9005 WHITE RAL 9010	40906Q 40907R 40908S
VEGA RF-RAIN	Integrated radio receiver Remote control included Cable connection for rain sensor	-	-	2 x 1,5 m cables: 4 wires + earth 3 wires	GREY RAL 9006 BLACK RAL 9005 WHITE RAL 9010	41015D 41016E 41017F

Part No. for DC VERSIONS (24 Vdc ±10%)

MODEL	SYNCHRO	FEEDBACK	CABLE	COLOUR	PART No.
VEGA DC	-	-	1,5 m 2 wires	GREY RAL 9006 BLACK RAL 9005 WHITE RAL 9010	40903N 40904O 40905P
SYNCHRO VEGA DC	Yes	-	3 m 5 wires	GREY RAL 9006 BLACK RAL 9005 WHITE RAL 9010	41122C 41123D 41124E
VEGA DC F-SIGNAL	-	open/close	1,5 m 5 wires	GREY RAL 9006 BLACK RAL 9005 WHITE RAL 9010	41304W 41305X 41306Y
SYNCHRO VEGA DC F-SIGNAL	Yes	open/close	2x 3 m 5 wires - 3 wires	GREY RAL 9006 BLACK RAL 9005 WHITE RAL 9010	41307Z 41308A 41309B

NOTE: brackets not included - to be ordered separately

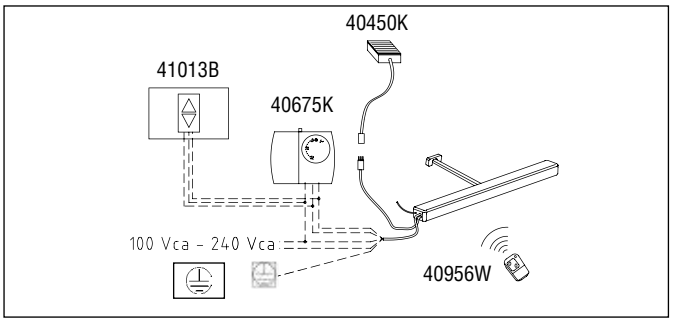

For a more detailed wiring layout see the manual of instructions

Radio control supplied
with VEGA RF and VEGA RF-RAIN
ACTUATOR part No. 40956W

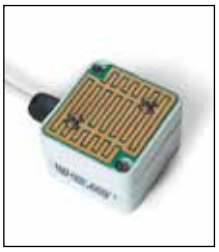

Rain sensor RS
part No. 40450K

Actuator dimensions

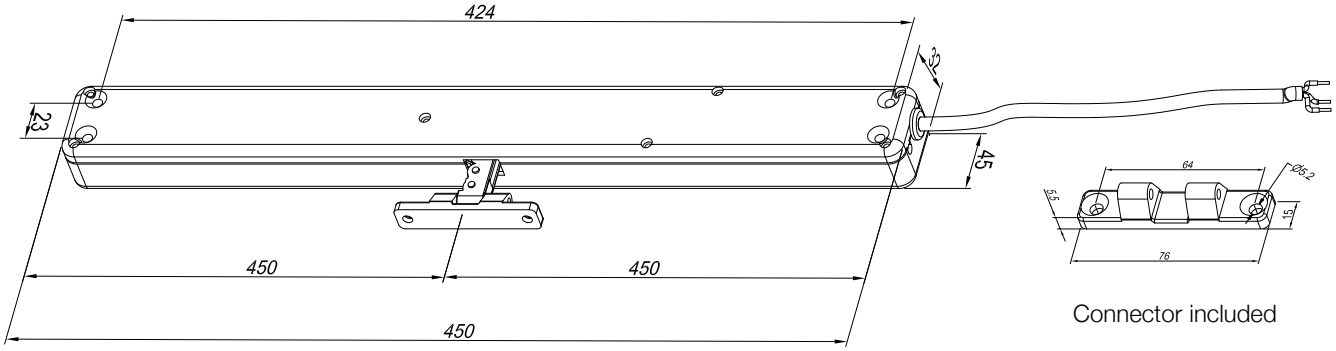

Connector included

Accessories

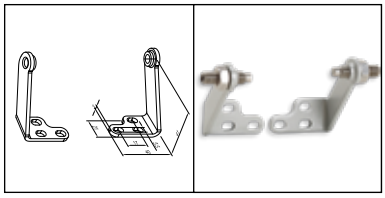

Long slim bracket kit
GREY RAL 9006 part no. 41898F
BLACK RAL 9005 part no. 41899G
WHITE RAL 9010 part no. 41900H

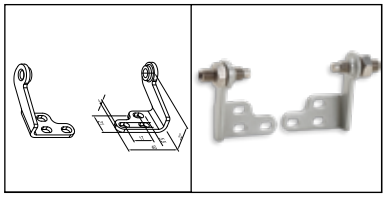

Short slim bracket kit
GREY RAL 9006 part no. 41901I
BLACK RAL 9005 part no. 41902J
WHITE RAL 9010 part no. 41903K

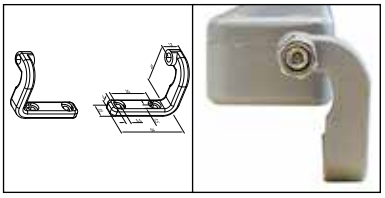

Die-cast bracket kit
GREY RAL 9006 part no. 40843F
BLACK RAL 9005 part no. 40844G
WHITE RAL 9010 part no. 40845H

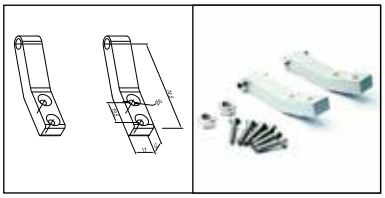

Long bracket kit
GREY RAL 9006 part no. 40941H
BLACK RAL 9005 part no. 40942I
WHITE RAL 9010 part no. 40943J

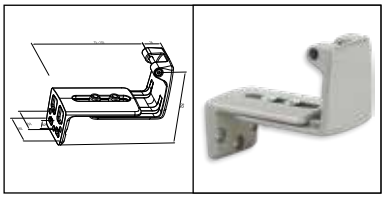

Aluminum adjustable “Z” bracket
for bottom hinged windows
GREY part no. 41709Z
BLACK part no. 41710A
WHITE part no. 41711B

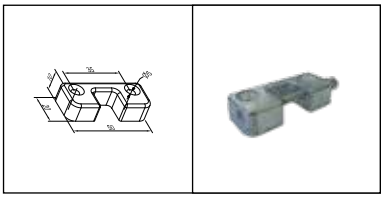

Flat connector (alternative)
GREY part no. 84793Z

Installation examples

Top hinged windows

Top hinged windows, two Synchro actuators

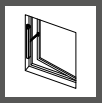

Side hinged windows

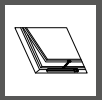

Roof windows

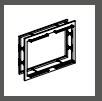

Parallel windows

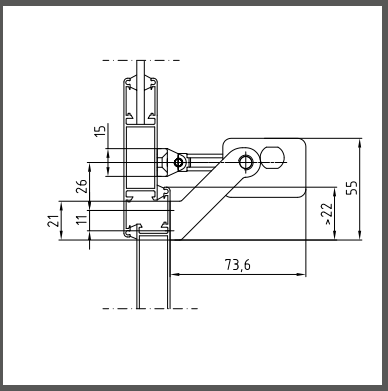

Front installation
with long slim bracket

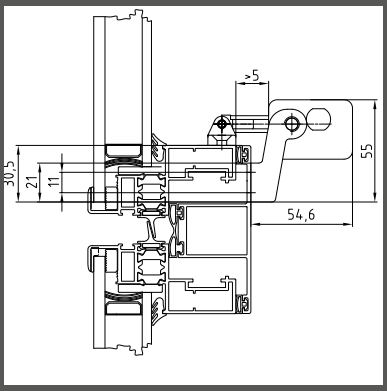

Concealed vent
with short slim bracket

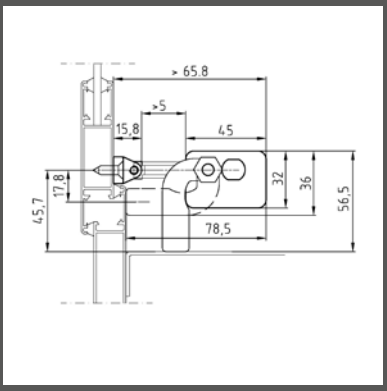

With or without windowsill,
with die-cast bracket

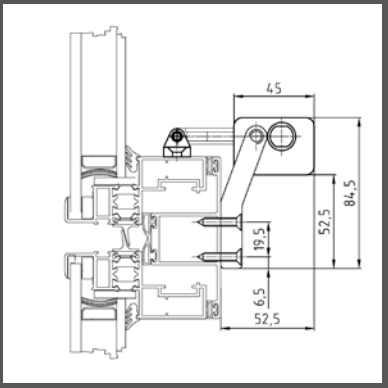

With long bracket kit

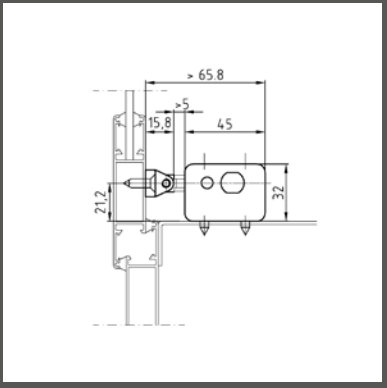

On windows with windowsill

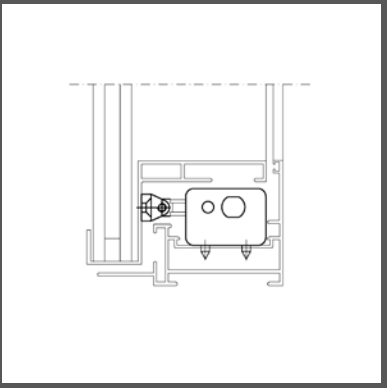

Inside a curtain wall frame

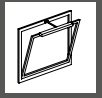

Bottom hinged windows

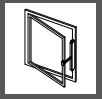

Side hinged windows

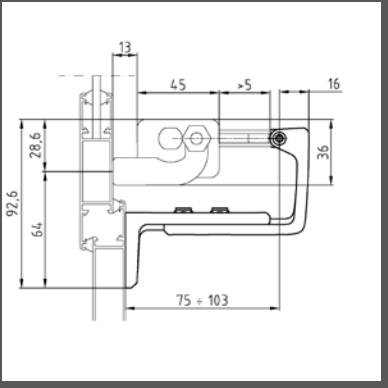

On the frame with adjustable "Z" bracket

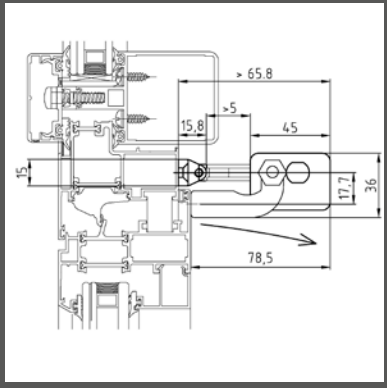

On the vent with die-cast bracket

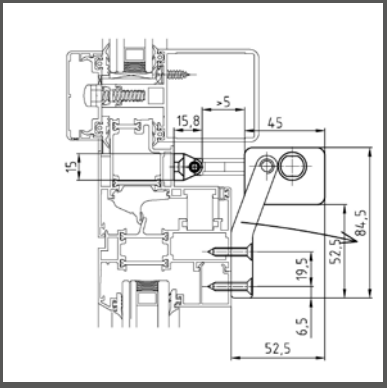

On the vent with long bracket kit

⚠ The instructions for a safe installation are included in the section “SECURITY WARNINGS”

SPECIFICATION PROSPECTS

Electric chain actuator Ultraflex Control Systems named Vega with chain in double stainless steel links.
Voltage supply: from 100 to 240 Vac or 24 Vdc – Electronic limit stop; electronic stop in the intermediate positions in case of overload.
Casing in painted die-cast aluminium with very small section (45x32 mm).

Electric chain actuator Ultraflex Control Systems named Synchro-Vega with chain in double stainless steel links. Suitable for mounting more than one actuators (max 4 actuators) on the same vent.
Voltage supply: 24 Vdc – Electronic limit stop; speed control; electronic stop in the intermediate positions in case of overload. Casing in painted die-cast aluminium with very small section (45x32 mm).
It is conform to 2004/108/CE directive.
When “free potential open/close feedback” is required, indicate suffix “F-SIGNAL”

TWIN QUASAR - TWIN VEGA

Two-chains actuator

Twin Quasar : Force 600 N - Maximum stroke 500 mm

Twin Vega: Force 600 N - Maximum stroke 300 mm

MAIN FEATURES

- The strongest chain actuator: 600 N
- Chains in double stainless steel links.
- Equipped with an integrated speed synchronization control board.
- Quick and easy installation: the manual closing position regulation is not required. The stop in closing position is regulated by an electronic limit switch control.
- Electronic stop in the intermediate positions in case of overload.

- **F-SIGNAL** versions provide opening and closing feedback signal (free potential, maintained contact), activated by the current limit.
- Suitable for combined installation with the additional locking device **E-LOCK** (see related data sheet).

INSTALLATION REMARKS

- In case of vents with four-bar hinges, please contact our Technical Dept.
- If installed on PVC windows, the profile has to be reinforced.
- In case of Building Management System control, avoid repetitive commands in the same direction.

For further information contact our Tech. Dept.

24 Vdc version is suitable for installation on **Smoke and Heat Exhaust Ventilators (SHEV)** in conformity to European Standard **EN 12101-2**, tested by Istituto Giordano.

The BMSline versions are fully programmable (stroke, speed, force, ...); different scenarios are selectable with a connection to a computer throught dedicated software. See BMSline section.

TECHNICAL DATA

	TWIN QUASAR AC VERSION	TWIN QUASAR DC VERSION	TWIN VEGA DC VERSION
VOLTAGE SUPPLY	100 Vac - 240 Vac	24 Vdc ± 10%	24 Vdc ± 10%
CURRENT ABSORPTION (max load)	0,9 A - 0,4 A	1,8 A	1,4 A
OPERATION	-	polarity inversion	polarity inversion
MAX FORCE	600 N	600 N	600 N
SPEED	~15 mm/s	~15 mm/s	~9 mm/s
LOCKING FORCE	5000 N	5000 N	5000 N
DUTY CYCLE	50%	50%	50%
PARALLEL CONNECTION	Yes	Yes	Yes
LIMIT STOP	Electronic	Electronic	Electronic
SAFETY STOP	Electronic	Electronic	Electronic
PROTECTION CLASS	IP40	IP40	IP30

Part No. for AC VERSIONS (100 Vac - 240 Vac)

MODEL	STROKE	FEEDBACK	CABLE	COLOUR	PART No.
TWIN QUASAR AC	500 mm	-	3 m 3 wires + earth	SILVER ANODIZED BLACK RAL 9005 WHITE RAL 9010	40989D 40990E 40991F

Part No. for DC VERSIONS (24 Vdc ±10%)

MODEL	STROKE	FEEDBACK	CABLE	COLOUR	PART No.
TWIN QUASAR DC	500 mm	-	3 m 2 wires	SILVER ANODIZED BLACK RAL 9005 WHITE RAL 9010	40992G 40993H 40994I
TWIN QUASAR DC F-SIGNAL	500 mm	free potential open/close	3 m 5 wires	SILVER ANODIZED BLACK RAL 9005 WHITE RAL 9010	41310C 41311D 41312E
TWIN VEGA DC	300 mm	-	3 m 2 wires	SILVER ANODIZED BLACK RAL 9005 WHITE RAL 9010	41245P 41246Q 41247R
TWIN VEGA DC F-SIGNAL	300 mm	free potential open/close	3 m 5 wires	SILVER ANODIZED BLACK RAL 9005 WHITE RAL 9010	41313F 41314G 41315H

NOTE: brackets not included - to be ordered separately

Twin Quasar dimensions

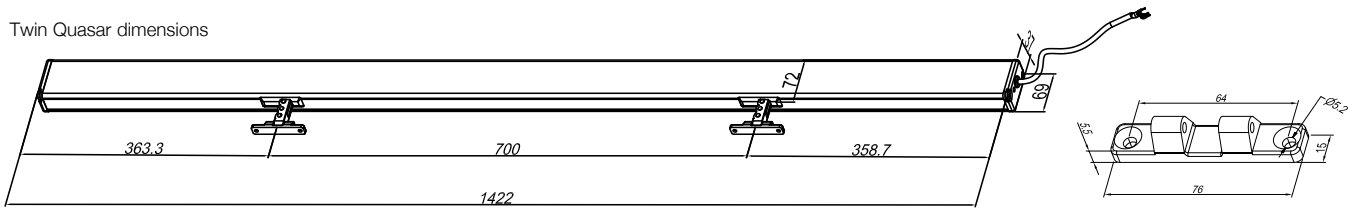

Connector included

Twin Vega dimensions

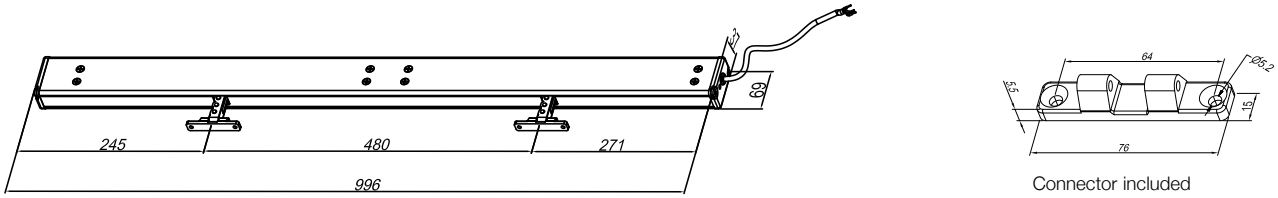

Connector included

Accessories

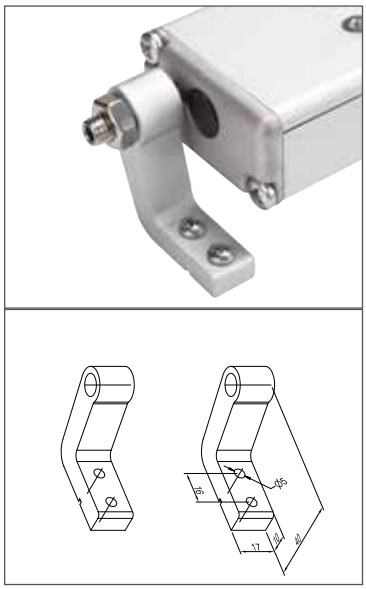

Pivoting bracketst (to be ordered separately)

GREY	part No. 41906N
BLACK	part No. 41907O
WHITE	part No. 41908P

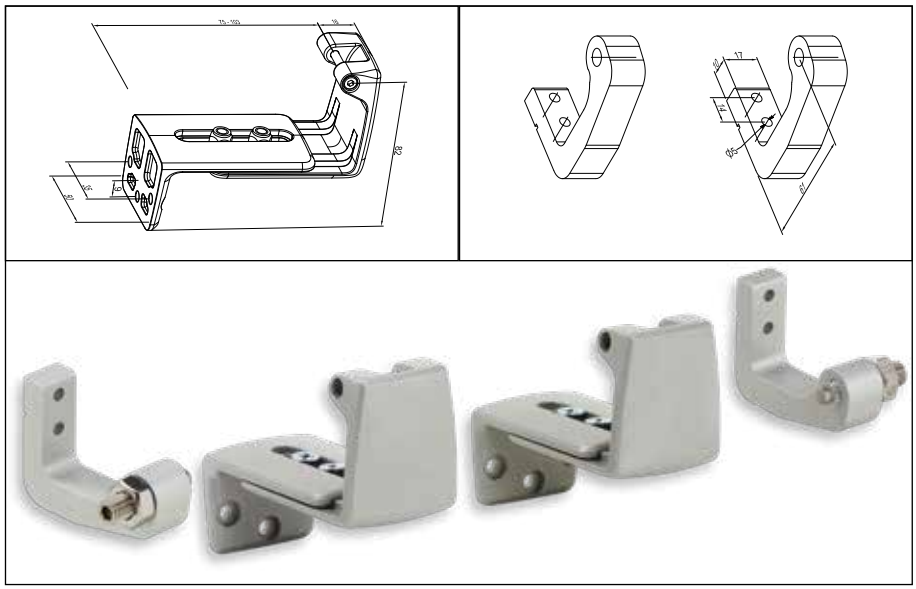

Brackets kit for bottom hinged windows:

GREY anodized aluminium	part No. 41712C
BLACK RAL 9005	part No. 41713D
WHITE RAL 9010	part No. 41714E

Installation examples

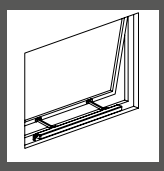

Top hinged windows Twin Quasar

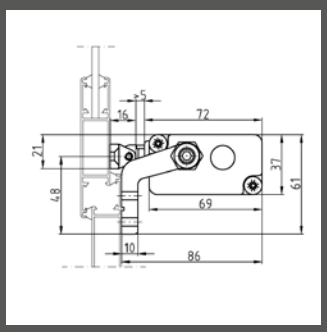

On the frame with pivoting brackets

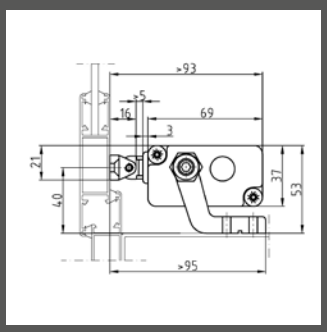

On windowsill with pivoting brackets

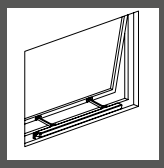

Top hinged windows Twin Vega

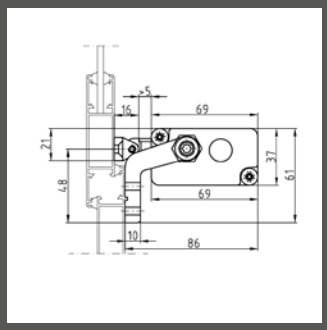

On the frame with pivoting brackets

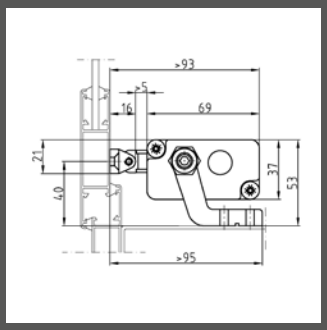

On windowsill with pivoting brackets

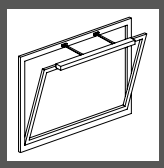

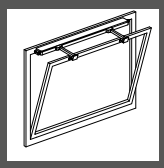

Bottom hinged windows Twin Quasar

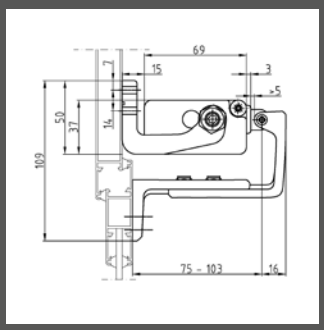

On the frame with brackets for bottom hinged windows

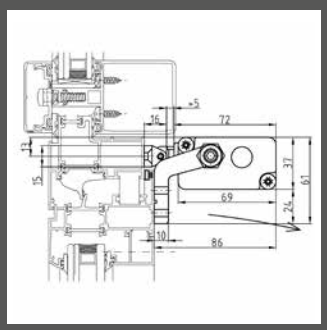

On the vent with pivoting brackets

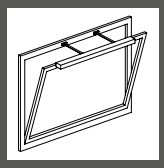

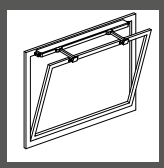

Bottom hinged windows Twin Vega

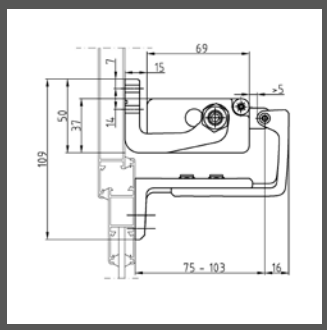

On the frame with brackets for bottom hinged windows

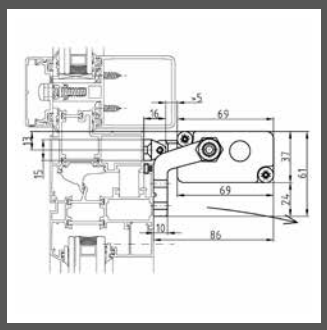

On the vent with pivoting brackets

⚠ The instructions for a safe installation are included in the section “SECURITY WARNINGS”

SPECIFICATION PROSPECT

Electric chain actuator Ultraflex Control Systems named Twin Quasar with two chains in double stainless steel links and electronic circuit for the two internal motors control. Force 600 N. Stroke 500 mm. Voltage supply 100-240 Vac or 24 Vdc. Electronic limit stop and electronic stop in the intermediate positions in case of overload. Parallel connection. Aluminium casing anodized or painted.

Electric chain actuator Ultraflex Control Systems named Twin Vega with two chains in double stainless steel links and electronic circuit for the two internal motors control. Force 600 N. Stroke 300 mm. Voltage supply 24 Vdc. Electronic limit stop and electronic stop in the intermediate positions in case of overload. Parallel connection.

STILE

Chain actuator – Force 300 N – Stroke 400 mm

MAIN FEATURES

- Double link chain for a better load resistance in case of top hinged windows, heavy windows or roof windows.
- Glass strengthened nylon casing.
- Double electric insultation actuator (no electric connection to earth is needed).
- The special removable plug allows a very quick and easy connection. It is deal for the final test of the actuators on the building site.
- Provided with closing feedback signal.

- **STILE** with selectable stroke 230/400 mm
- **STILE R** with a maximum stroke of 400 mm, adjustable from 0 to 300 mm, by positioning a magnet on the chain during installation.
- **STILE RF** with a selectable stroke 230/400 mm and integrated Radio Receiver. Radio Transmitter to be ordered separately-

INSTALLATION REMARKS

- Exclusive system for a quick and safe installation.
- Quick release system for an easy window cleaning.
- Supplied with pivoting brackets and spacer for chain connector to be used on windows with a high overlap.
- In case of vents with four-bar hinges, please contact our Technical Dept.
- For installation of two **STILE** on the same vent it is available the Coupling Control Unit CP230, part No. 41089V.
  (See CONTROL ACCESSORIES section)

	STILE	STILE R	STILE RF
VOLTAGE SUPPLY	230 Vac 50/80 Hz	230 Vac 50/80 Hz	230 Vac 50/80 Hz
ELECTRIC CONNECTION	3 wires (*)	3 wires (*)	3 wires (*)
MAXIMUM STROKE	selectable 230/400 mm	400 mm: adjustable from 0 to 300 mm	selectable 230/400 mm
FORCE	300 N (**)	300 N (**)	300 N (**)
SPEED	~30 mm/s	~30 mm/s	~30 mm/s
CURRENT ABSORPTION (max load)	0,8 A	0,8 A	0,8 A
PARALLEL CONNECTION	Yes	Yes	Yes
LIMIT STOP	Micro switches	Micro switches/Hall sensor	Micro switches
PROTECTION	Thermic	Thermic	Thermic
FEEDBACK SIGNAL	Close	Close	Close
PROTECTION CLASS	IP20	IP20	IP20
RADIO RECEIVER (integrated)	No	No	Yes
PART No.			
GRAY	41554A	41558E	41730U
BLACK	41555B	41559F	41731V
WHITE	41556C	41560G	41732W

(*) Double electric insulation actuator: no electric connection to earth is needed.
(**) In case of push action and full stroke, maximum force is intended for short period only

Radio Transmitter
part No. 41729T
Compatible with Stile-RF and Radio Receiver 230 Vac and 24 Vdc.
6 CH (open-stop-close) can operate up to 6 CH simultanusly and/or independently.

Accessories

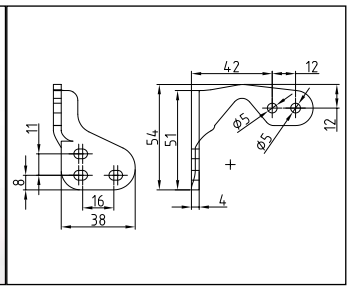

Pivoting brakets (included)

11 mm chain connector spacer (included)

Electrical connector included (no cable)

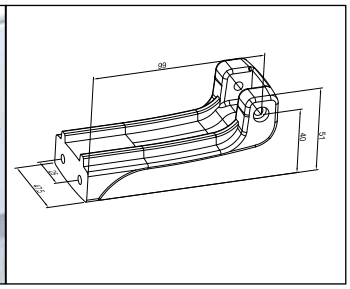

Bottom hinged window plastic bracket (to be ordered separately)

GREY: Part No. 41582C
BLACK: Part No. 41583D
WHITE: Part No. 41584E

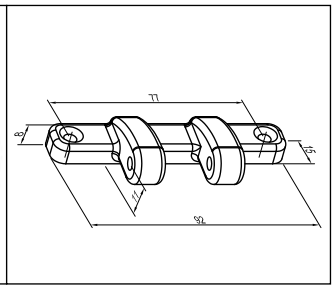

Chain connectof for concealed vent (to be ordered separately)
GREY: Part No. 41590K
BLACK: Part No. 41591L
WHITE: Part No. 41592M

Actuator dimensions

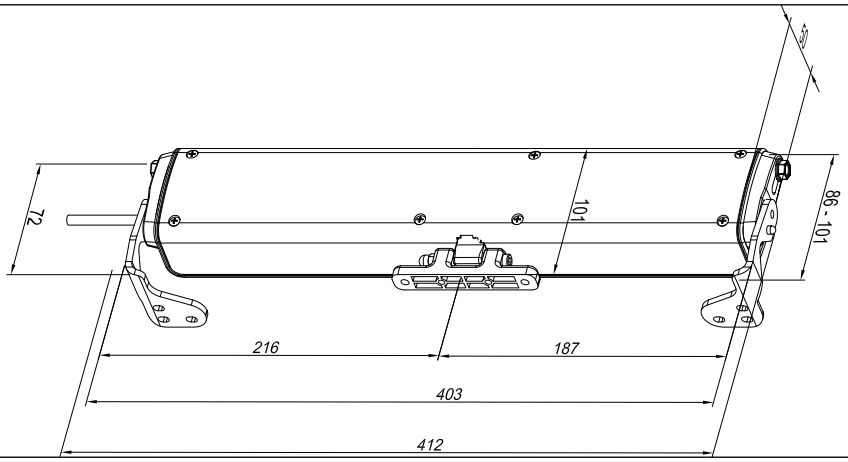

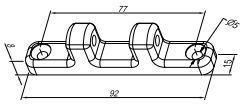

Connector included

Installation examples

Top hinged windows

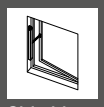

Side hinged windows

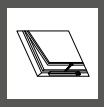

Roof windows

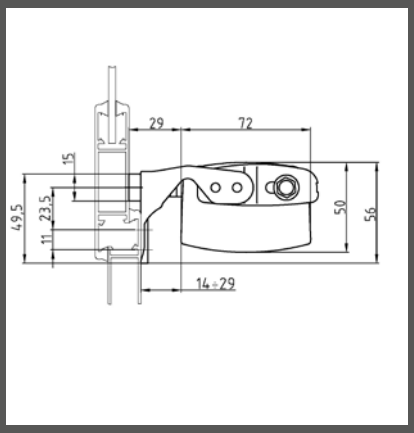

On the frame with pivoting brackets included

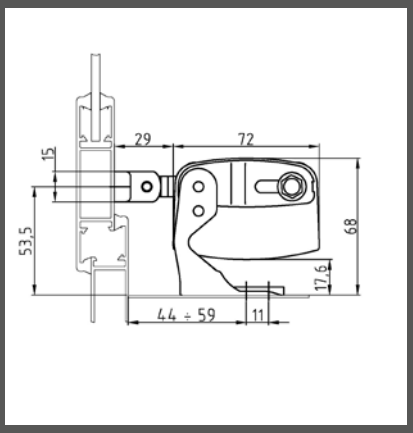

On the windowsill with pivoting brackets included

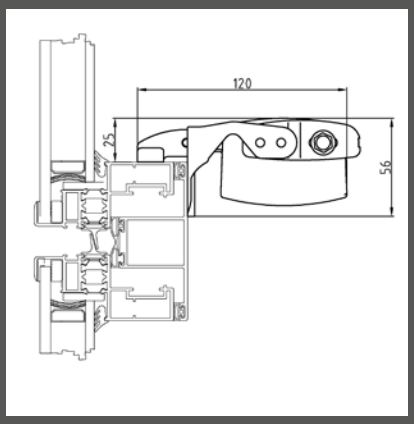

On the frame with pivoting brackets included and chain connector for concealed vents

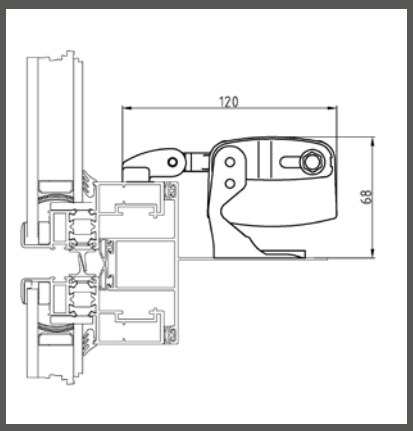

On the windowsill with pivoting brackets included and chain connector for concealed vents

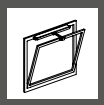

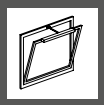

Bottom hinged windows

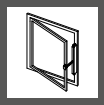

Side hinged windows

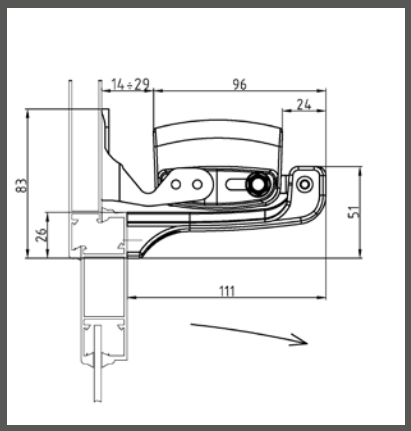

On the frame with pivoting brackets included and bottom hinged bracket

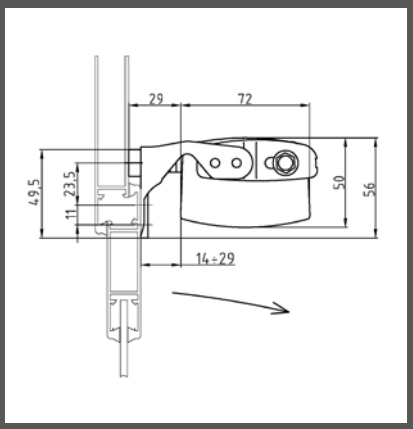

On the vent with pivoting brackets included

⚠ The instructions for a safe installation are included in the section “SECURITY WARNINGS”

SPECIFICATION PROSPECT

Class 2 electric insulation chain actuator Ultraflex Control Systems named Stile with double link chain in two versions: selectable stroke 230/400 mm or adjustable stroke from 0 to 300 mm. Voltage supply: 230 Vac. Parallel connection. Limit stop by micro switches and thermal protection. Plastic scratch resistant finish.

SINTESI

Chain actuator - Force in pull action 300 N - Stroke 250-380 mm

MAIN FEATURES

- Possibility of selecting two different strokes: 250 mm or 380 mm.
- Three dovetail slides for an easy installation; the sliding fixing bracket is included in the package.
- **SINTESI 2000**: exclusive system for electircal connection. The special removable plug allows a very quick and easy connection. It is deal for the final test of the actuators on the building site.

INSTALLATION REMARKS

- For installation on top hinged windows select the 250 mm stroke in order to better resist to the wind load.
- In case of vents with four-bar hinges, please contact our Technical Dept.
- Minimum window height: 500 mm with 250 mm stroke, 800 mm with 380 mm stroke. In case of lower windows install the pivoting bracket part No. 40560T.
- A longer eyelet is available on request in case of wooden or PVC windows.
- For installation of two **SINTESI 2000** on the same vent it is available Coupling Control Unit CP230, part No. 41089V. (See CONTROL ACCESSORIES section)

24 Vdc version is suitable for installation on **Smoke and Heat Exhaust Ventilators (SHEV)** in conformity to European Standard **EN 12101-2**, tested by Istituto Giordano.

	SINTESI 2000	SINTESI 24 V DC
VOLTAGE SUPPLY	230 Vac ± 10%	24 Vdc ± 10%
ELECTRIC CONNECTION	3 wires + earth	2 wires
OPERATION	-	by polarity inversion
STROKE	selectable 250 mm/380 mm	selectable 250 mm/380 mm
FORCE (in push action)	180 N (stroke 250 mm) 90 N (stroke 380 mm)	180 N (stroke 250 mm) 90 N (stroke 380 mm)
FORCE (in pull action)	300 N	200 N
SPEED	~40 mm/s	~14 mm/s
ABSORPTION (with max load)	0,65 A	1 A
PARALLEL CONNECTION	Yes	Yes
LIMIT STOP	Micro switches	Micro switches
SAFETY STOP	Thermic	Electronic
FEEDBACK SIGNAL	Close	Open/Close
PROTECTION CLASS	IP20	IP20
PART No.		
SILVER ANODIZED	40313C	37127H
DARK BROWN ANODIZED	40314D	37128K
WHITE PAINTED RAL 9010	40316F	37129L

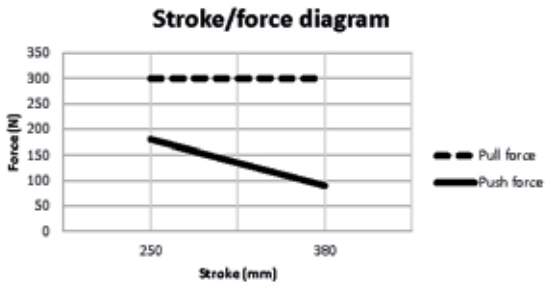
Stroke/force diagram
350
300
250
200
150
100
50
0
Force (N)
250
380
Stroke (mm)
Pull force
Push force

Actuator dimensions

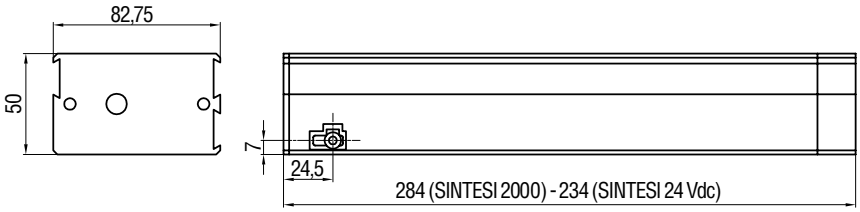

SPECIFICATION PROSPECTS

Electric chain actuator Ultraflex Control Systems named Sintesi with selectable stroke 250 mm or 380 mm.
Voltage supply 230 Vac or 24 Vdc. Removable plug for electrical connection (230 Vac version). Parallel connection.
Limit stop by micro switches, thermal protection in case of overload (230 Vac version) or electronic safety stop (24 Vdc version).
Casing in silver anodized, dark brown anodized, white painted RAL 9010. The 230 Vac version and the 24 Vdc version are conform to 2004/108/CE directive, the 230 Vac version is conform also to 2006/95/CE.

Accessories

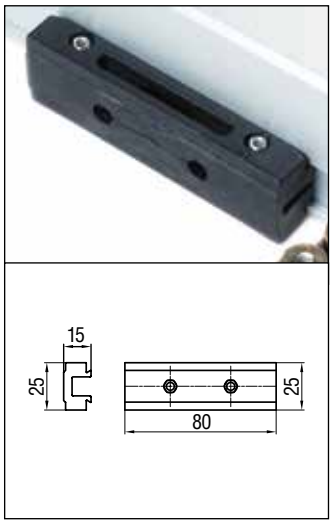

Sliding plastic fixing bracket (included)

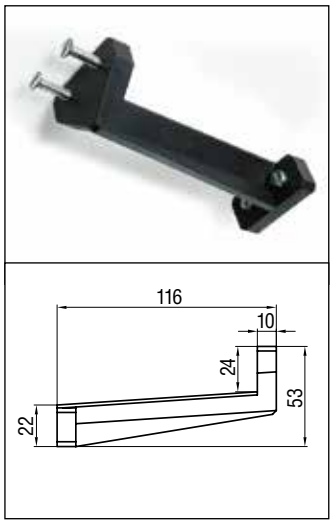

Bottom hinged window plastic bracket part No. 36665E

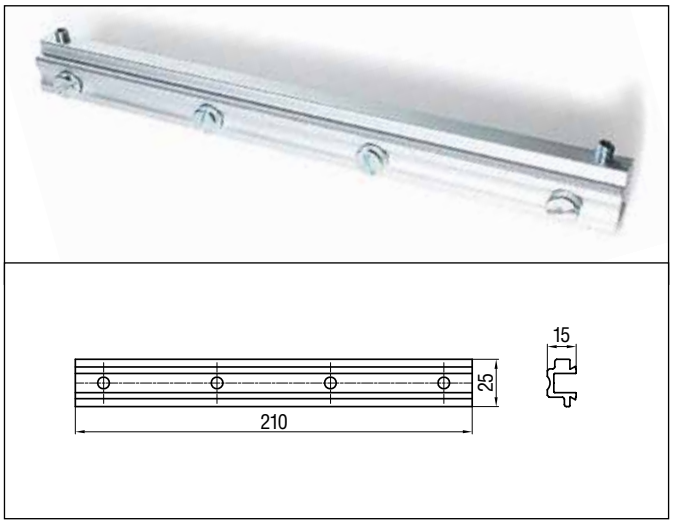

Long sliding aluminum bracket part No. 37021U for heavy windows and smoke and heat extraction installation

Installation examples

Top hinged windows

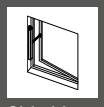

Side hinged windows

Roof windows

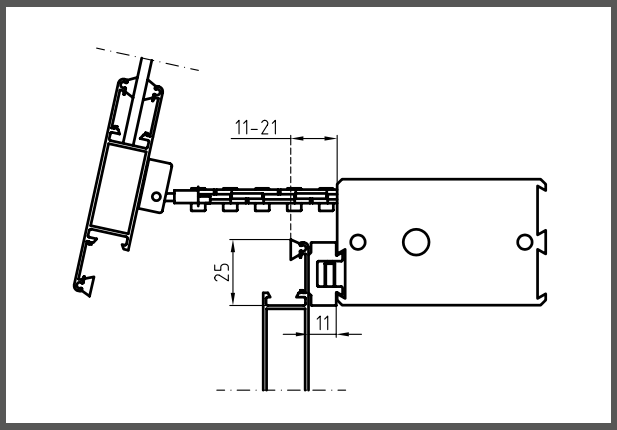

On the frame with the sliding fixing bracket included

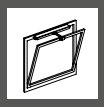

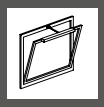

Bottom hinged windows

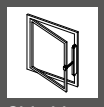

Side hinged windows

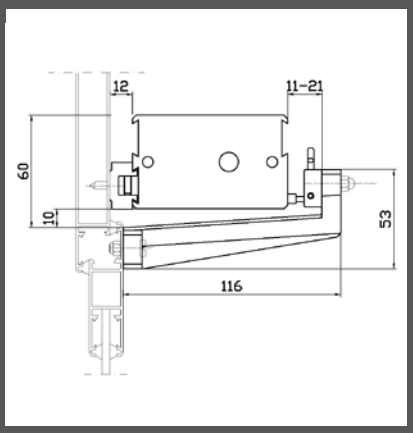

On the frame with the sliding fixing brackets included and the bottom hinged window bracket part No. 36665E

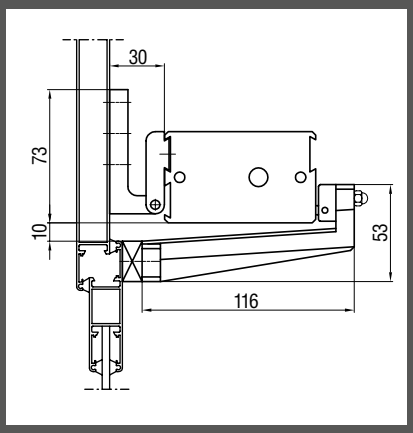

On the frame with the bottom hinged window brackets part No. 36665E and pivoting brackets part No. 40560T

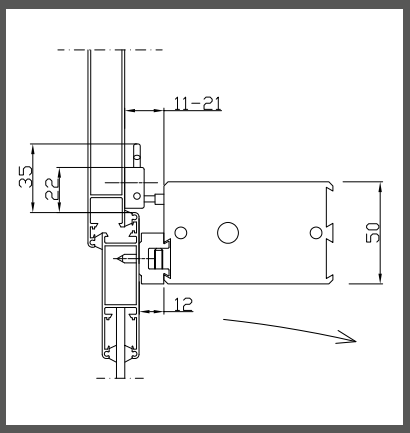

With sliding fixing bracket included

⚠ The instructions for a safe installation are included in the section “SECURITY WARNINGS”

Accessories

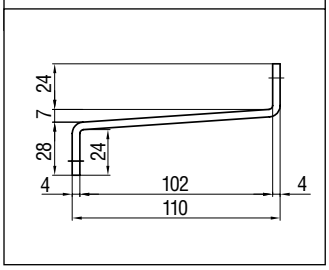

Bottom hinged window bracket part No. 40157I for smoke extraction installation and heavy windows

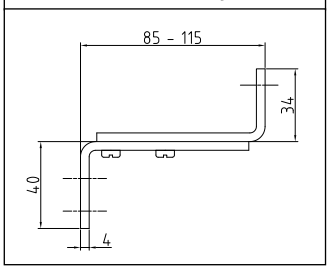

Adjustable aluminium bracket for bottom hinged window part No. 37493H

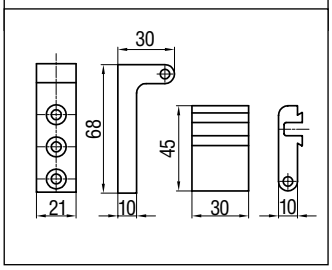

Aluminium dovetail pivoting bracket part No. 40560T

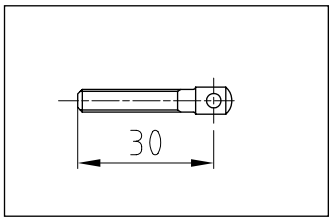

Included

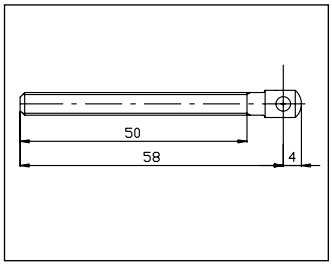

Chain tie-rod for special installation (for example wood or PVC window frame) part No. 81222C

SUPERMASTER

Chain actuator - Force in push action 400 N - Stroke 450-600-800 mm

MAIN FEATURES

- The longest stroke (800 mm) and the highest force (400 N): it solves the problems to operate very heavy vents and the necessity of wide opening without taking up space inside the room (800 mm only for bottom hinged windows).
- Double link chain.
- Red led light placed on the actuator to signal the close position.

INSTALLATION REMARKS

- Minimum window height: 900 mm for 450 mm stroke, 1200 mm for 600 mm stroke, 1600 mm for 800 mm stroke.
- For windows without windowsill a fixing bracket (sliding within the dovetail slide) is available for an easy installation.
- In case of vents with four-bar hinges, please contact our Technical Dept.
- Supplied with 2 m cable (450-600 mm), 3 m cable (800 mm).
- For installation of two **SUPERMASTER AC** on the same vent it is available the Coupling Control unit CP230, part No. 41089V. (See CONTROL ACCESSORIES section)

24 Vdc version is suitable for installation on **Smoke and Heat Exhaust Ventilators (SHEV)** in conformity to European Standard **EN 12101-2**, tested by Istituto Giordano.

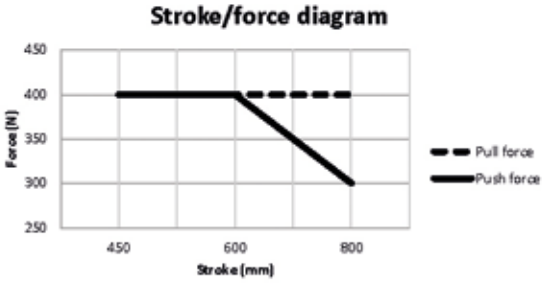

	SUPERMASTER 230 V AC			SUPERMASTER 24 V DC		
STROKE	450 - 600 - 800 mm			450 - 600 - 800 mm		
VOLTAGE SUPPLY	230 Vac ± 10%			24 Vdc ± 10%		
ELECTRIC CONNECTION	3 wires + earth			2 wires + signaling		
OPERATION	-			by polarity inversion		
FORCE (in push action)	400 N (300 N for 800 mm stroke)			400 N (300 N for 800 mm stroke)		
FORCE (in pull action)	400 N			400 N		
SPEED	~23 mm/s			~20 mm/s		
CURRENT ABSORPTION (with max load)	0,8 A			2 A		
PARALLEL CONNECTION	Yes			Yes		
LIMIT STOP	Micro switches			Micro switches		
SAFETY STOP	Thermic			Electronic		
FEEDBACK SIGNAL	-			Open/Close		
PROTECTION CLASS	IP20			IP20		
PART No.						
STROKE	**450 mm**	**600 mm**	**800 mm**	**450 mm**	**600 mm**	**800 mm**
SILVER ANODIZED	40462T	40452P	40518U	40506L	40461R	40469H
DARK BROWN ANODIZED	40465Z	40464X	40753T	40509T	40467D	40470S
WHITE PAINTED RAL 9010	40466B	40454U	40774O	40507N	40468F	40471U

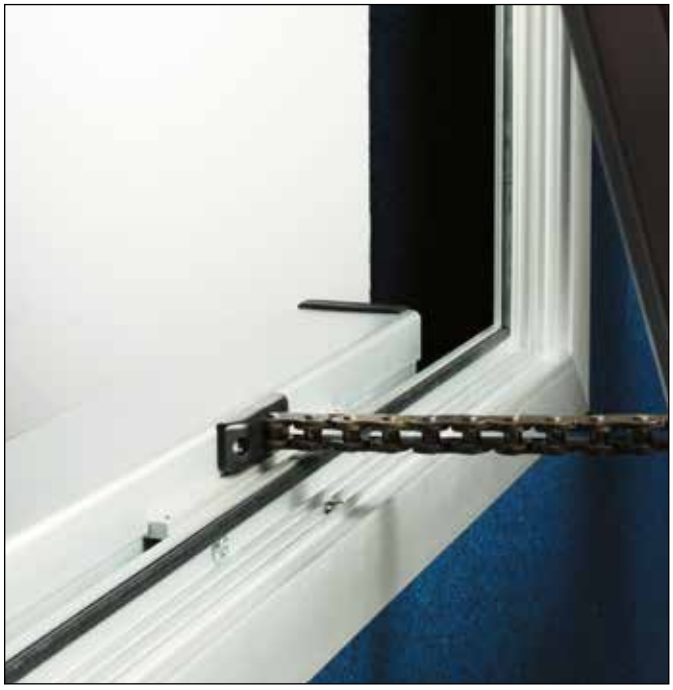

Actuator dimensions

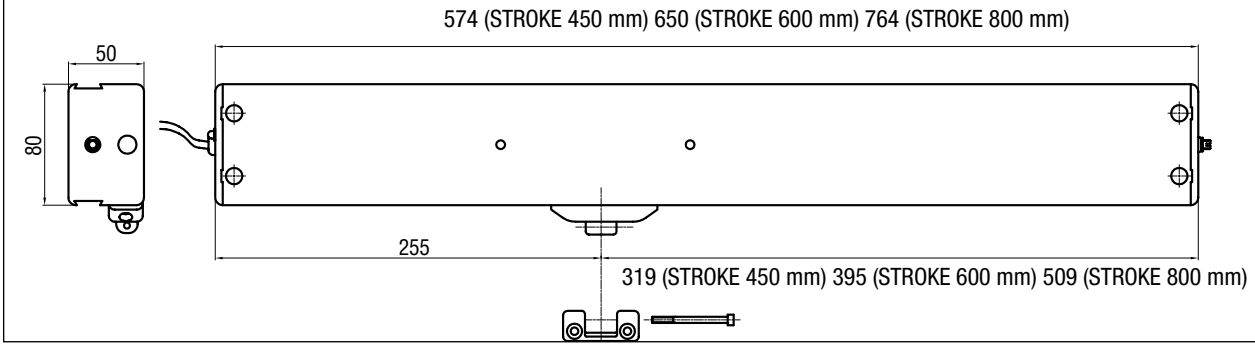

SPECIFICATION PROSPECTS

Electric chain actuator Ultraflex Control Systems named Supermaster with double link chain. Force 400 N.
Strokes: 450-600-800 mm. Voltage supply 230 Vac or 24 Vdc. Limit stop by micro switches and thermal protection (230 Vac version) or electronic safety stop (24 Vdc version).
Parallel connection. Casing in silver anodized or painted aluminium.
The 230 Vac version and the 24 Vdc version are conform to 2004/108/CE directive, the 230 Vac version is also conform to 2006/95/CE.

Accessories

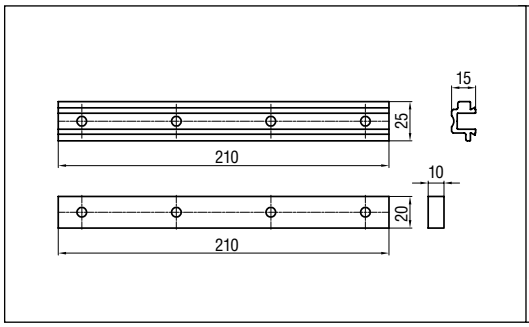

Sliding aluminium bracket with shim part No. 40460N

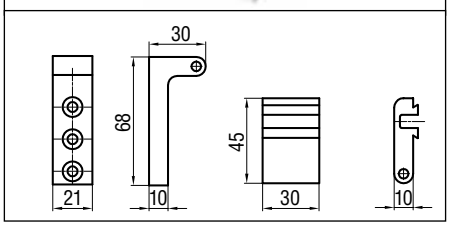

Pivoting brackets kit part No. 40560T

Installation examples

Top hinged windows

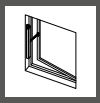

Side hinged windows

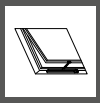

Roof windows

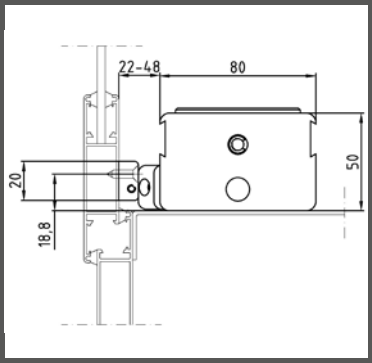

On windows with windowsill without brackets

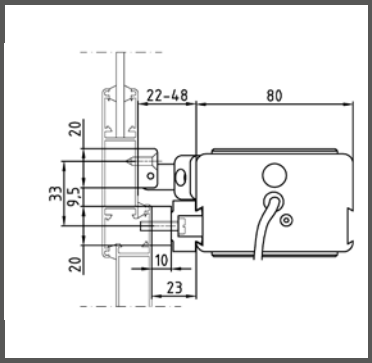

Without windowsill with bracket part No. 40460N

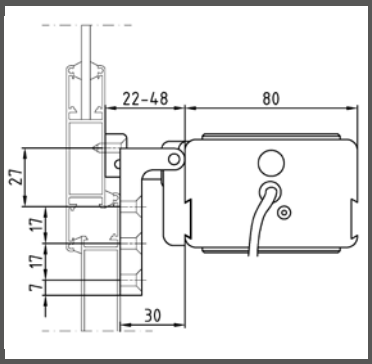

On the frame with pivoting brackets part No. 40560T

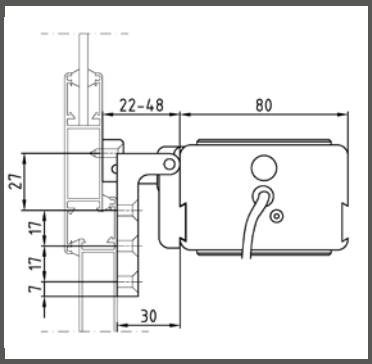

On windows with windowsill with pivoting brackets part No. 40560T

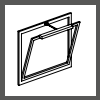

Bottom hinged windows

Side hinged windows

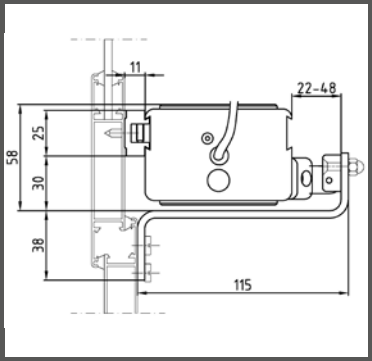

On the frame with bracket or bottom hinged window part No. 40472W

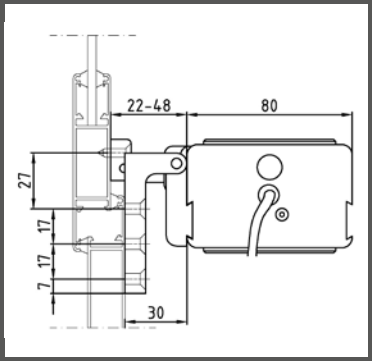

On the vent with the pivoting bracket part No. 40560T

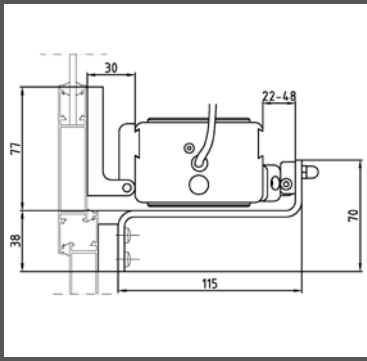

On the frame with the pivoting bracket part No. 40560T and bracket part No. 40472W

⚠ The instructions for a safe installation are included in the section “SECURITY WARNINGS”

Accessories

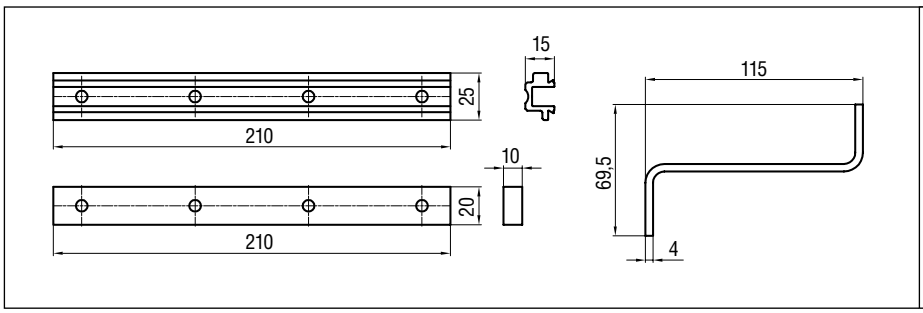

Sliding aluminium steel bracket with shim and bottom hinged painted steel bracket part No. 40472W

ADDITIONAL LOCKING DEVICES

for automated windows with multiple locking points

In accordance with the standards related to energy saving, water- and airtightness of the windows has become even more important, requiring hardware systems with multiple locking points.
In case of window automation it is necessary to complement the chain actuator with a further actuator, able to operate in a transversal way the window hardware, in order to engage multiple locking points on the frame.

UCS provides two solutions for this purpose: E-LOCK and Plusultra

E-LOCK

electric actuator to be installed inside the frame of the window

Electrical connector

E-LOCK is a linear drive designed to lock the window hardware and ensure, in combination with a chain actuator, the best window closing tightness.
E-LOCK can be integrated into the window profile or on the profile, connected to the window hardware through a slot (please, contact our Tecnhical Department). It has been designed to be used in combination with electric chain actuators series QUASAR, VEGA and NANO 24 Vdc.

- Stainless steel case.
- The locking plate can be mounted on both side of the drive.
- Provided with an emergency unlocking mechanism.
- Different strokes and directions can be selected by internal switches.
- Available a version to be used with BMSline actuators for the direct connection to a Building Management System network.
- Available on request E-LOCK F-SIGNAL version that provides lock/unlock feedback signal
- It is possible to install two E-LOCK drives (in F-SIGNAL version) on one window: contact our Technical Department for the special configuration

Suitable for installation on **Smoke and Heat Exhaust Ventilators (SHEV)** in conformity to European Standard **EN 12101-2**, tested by Istituto Giordano.

	E-LOCK	E-LOCK BMS
POWER SUPPLY	24 Vdc ± 10%	24 Vdc ± 10%
OPERATION	polarity inversion	via BUS line
STROKE selectable by switches	19 mm - 38 mm	19 mm - 38 mm
FORCE (push and pull)	600 N	600 N
SPEED (full load)	~1,6 mm/s	~1,6 mm/s
CURRENT ABSORPTION (max load)	0,3 A	0,3 A
PARALLEL CONNECTION	Yes	Yes
LIMIT STOP	Hall sensor	Hall sensor
SAFETY STOP	Electronic	Electronic
PROTECTION CLASS	IP32	IP32
BMS Compatible	No	Yes
PART No.	41588I	41589J

Installation examples

Top hinged window

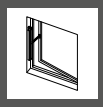

Side hinged windows

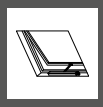

Roof windows

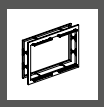

Parallel windows

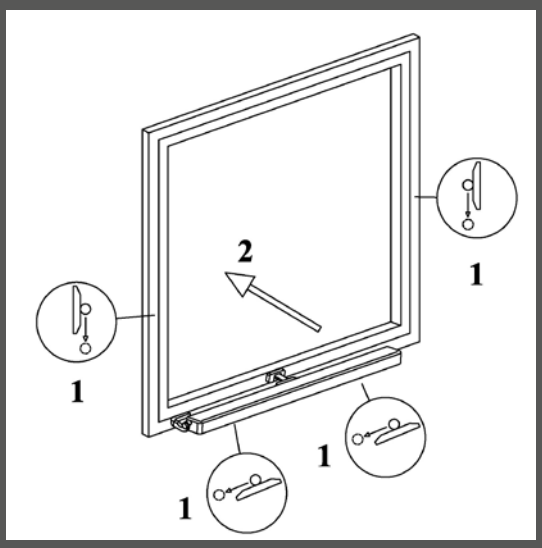

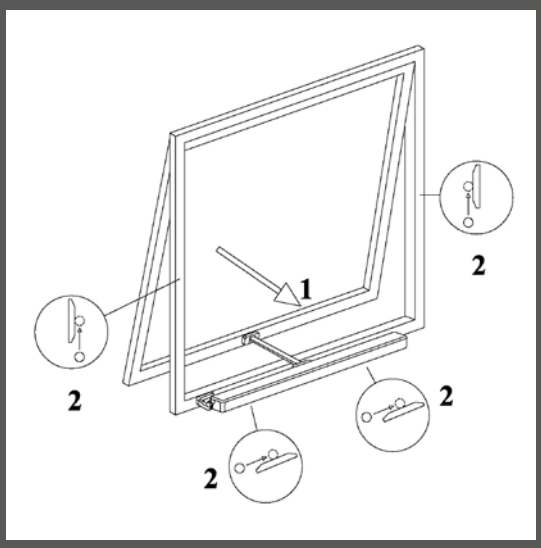

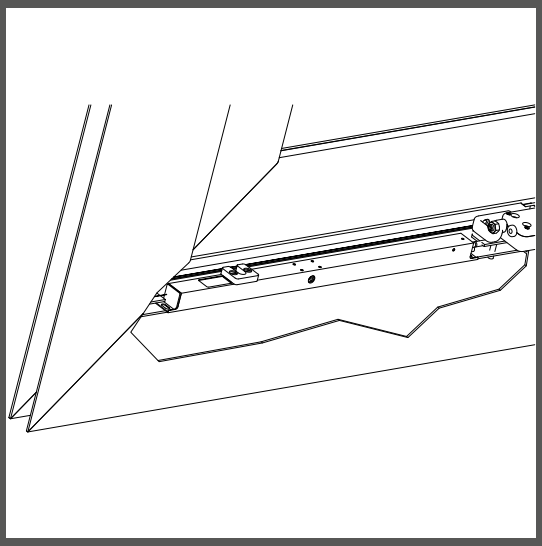

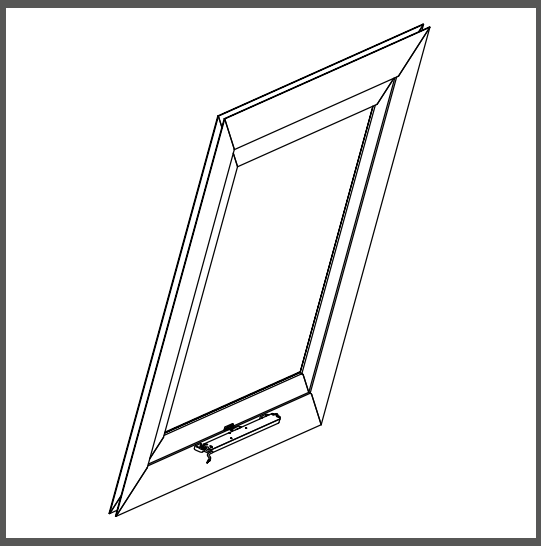

Operating logic

E-LOCK

Opening: the E-Lock actuator unlocks the hardware and, only after the complete release, the power is supplied to the chain actuator for the window opening.
Closing: the E-lock actuator remains in the unlock position until the fully closing operation of the chain actuator, and then locks the window hardware.
The sequence of the operations happens in two ways:
a) delay, selectable by dip switches
b) feedback signal , from microswitches or magnetic contacts installed on the window or signal coming from UCS chain actuators in “F-Signal” versions.

E-LOCK BMS

E-LOCK BMS communicates via BUS line with chain actuators BMSline, whose electronic board manages the feedback information and checks the locking or unlocking status of the hardware.

Accessories

Emergency unlocking tool part. No. 41596Q

Actuator dimensions

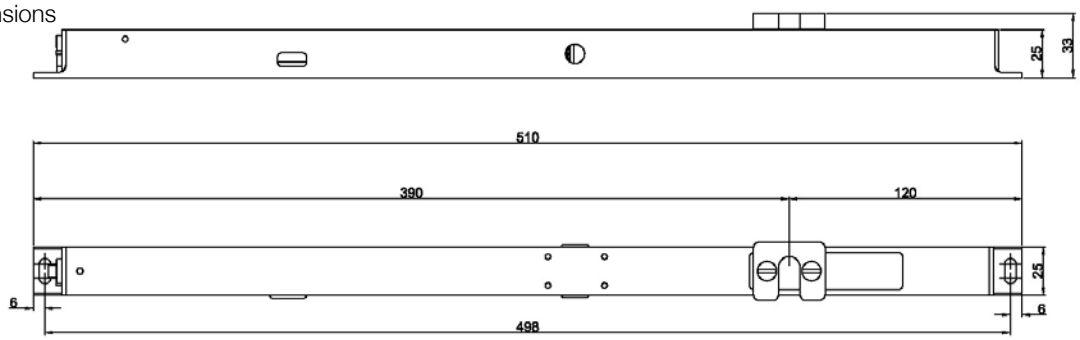

PLUSULTRA

additional locking device - NOT MOTORIZED

PlusUltra is an easy inexpensive solution for the automation of windows with multiple locking points, avoiding the installation of additional electric actuators (or electronic locks).

- It is suitable for outward opening windows.
- PlusUltra has to be installed together with chain actuators series QUASAR and VEGA. A version for manual opening mechanism is also available.
- The force to release the locking points (before opening) and engage them again (after complete closing) is supplied by the chain of the electric actuator during the first part of its travel.
- The transmission of the movement is provided by 90° rotation of the standard pin for internal gear (7x7 mm) included in PlusUltra. The gearbox integrated in the profile operates the bars of the multiple docking hardware.
- PlusUltra provides max torque of 0.34 Nm, usually suitable for operation of max 4 locking points
- According to the actuator to which it is connected, different fixing systems are necessary.
- Avaialble two versions: PLUSULTRA LEFT for gearbox with clockwise closing rotation
  PLUSULTRA RIGHT for gearbox with counterclockwise closing rotation

POSSIBLE CONFIGURATIONS

PLUSULTRA RIGHT/LEFT + QUASAR (electric actuator) + specific brackets
PLUSULTRA RIGHT/LEFT + VEGA (electric actuator) + specific brackets

PART No.	
PLUSULTRA RIGHT GREY RAL 9006	41428TRN
PLUSULTRA RIGHT BLACK RAL 9005	41429TRN
PLUSULTRA RIGHT WHITE RAL 9010	41430TRN
PLUSULTRA LEFT GREY RAL 9006	41431TRN
PLUSULTRA LEFT BLACK RAL 9005	41432TRN
PLUSULTRA LEFT WHITE RAL 9010	41433TRN

Installation examples

Top hinged window

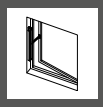

Side hinged windows

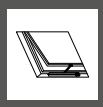

Roof windows

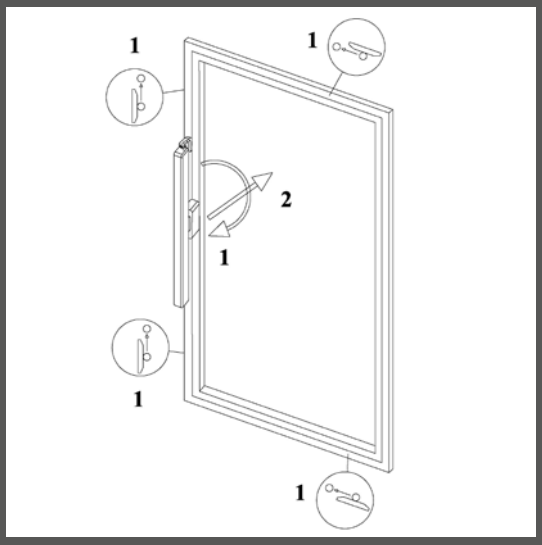

Opening: PlusUltra system releases the locking points before the window opening

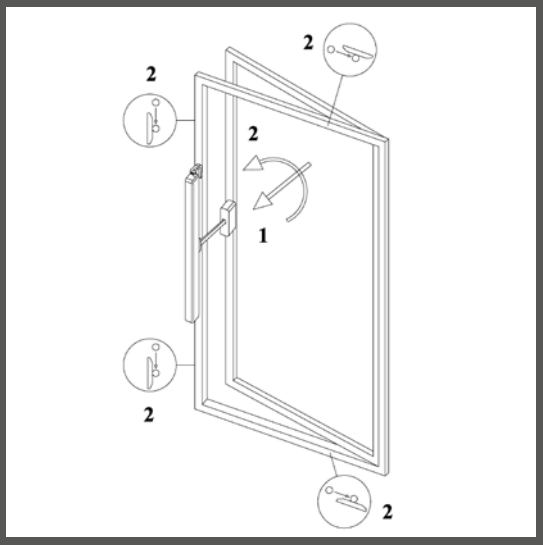

Closing: PlusUltra system engages the locking points after the complete window closing

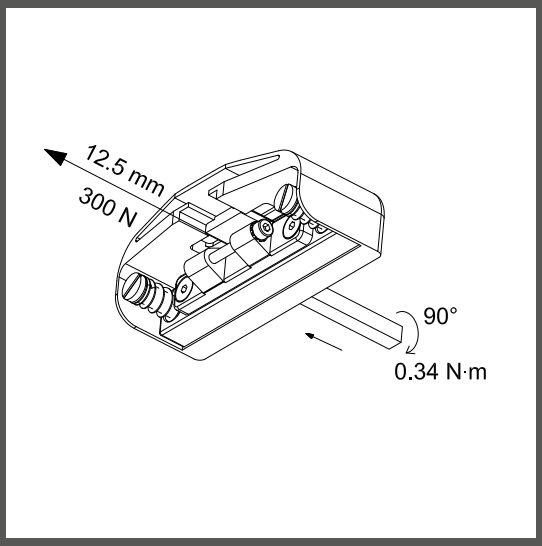

Opening: PlusUltra system releases the locking points before the window opening

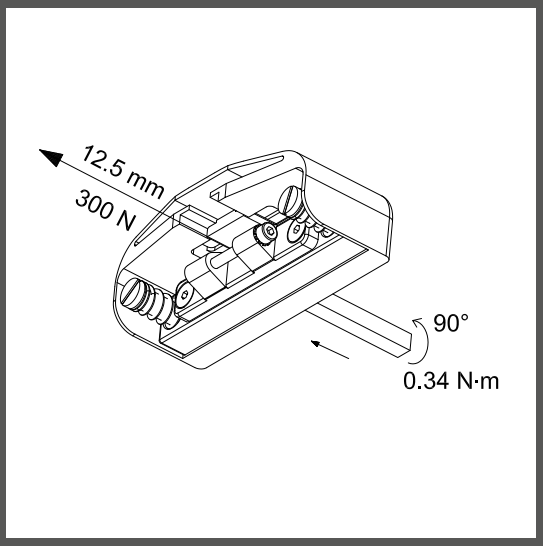

Closing: PlusUltra system engages the locking points after the complete window closing

Actuator dimensions

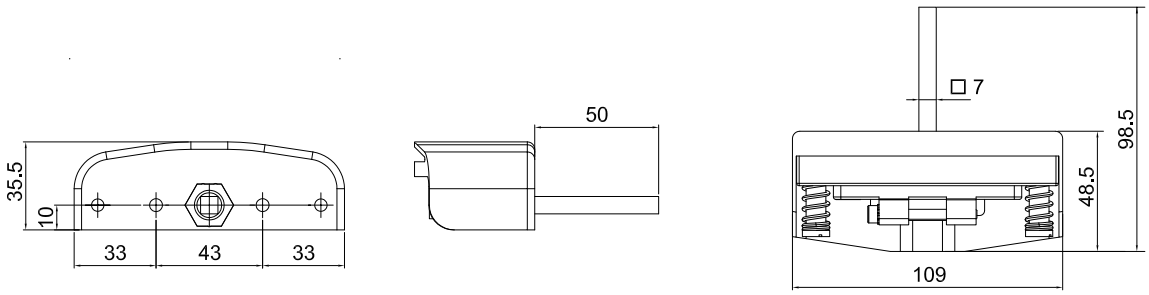

MAX

Linear spindle actuator - Force in push action 450 N with stroke 180 mm and 300 mm and 350 N with stroke 500 mm

Kit to reduce the stroke
part No. 40921N

Two holes for versatile
installation of the sliding bracket

MAIN FEATURES

- Load transmission by rigid spindle.
- Supplied with 1 m cable.
- Not suitable for outdoor application. In this case, a special version is available on request: Max WP-specific installation guide to follow

VERSIONS

- With end bracket and adjustable eyelet for an easier installation.
- With sliding bracket and fixed eyelet: for easier installation also on window with windowsills or other internal obstacles, the sliding bracket can be fixed on the whole length of actuator, provided with two dovetail guides.

VOLTAGE SUPPLY	230 Vac ± 10%
ELECTRIC CONNECTION	3 wires + earth
STROKE	180/300/500 mm
FORCE (push and pull action)	450 N (180 - 300 mm) / 350 N (500 mm*)
SPEED	~20 mm/s
CURRENT ABSORPTION (with max load)	0,7 A
PARALLEL CONNECTION	Yes
LIMIT STOP	Micro switches
SAFETY STOP	Thermic
IP PROTECTION	IP65

* if installed on top hinged windows the maximun force on push action is reduced to 300 N (for 180 and 300 mm stroke) and 230 N (for 500 mm). In case of installation on heavy top hinged windows, contact our Tech. Dept.

PART No.	Stroke 180 mm	Stroke 300 mm	Stroke 500 mm
SILVER ANODIZED WITH END BRACKETS	41325R	40541N	40614P
SILVER ANODIZED WITH SLIDING BRACKETS (with fixed terminal)	-	40915Z	40929V

SPECIFICATION PROSPECTS

Electric Linear actuator Ultraflex Control Systems named Max with load transmission by rigid spindle, stroke 180, 300 or 500 mm fixing end bracket included. Force 450 N (350 N for stroke 500). Protection class IP65, Voltage supply 230 Vac. Limit stop by micro switches and thermal protection. Parallel connection. Casing in silver anodized, dark brown anodized.

Installation examples

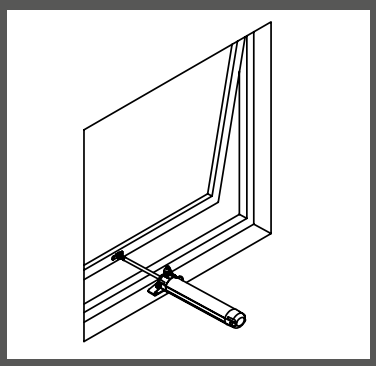

Installation on top hinged window with windowsill with fixing end bracket

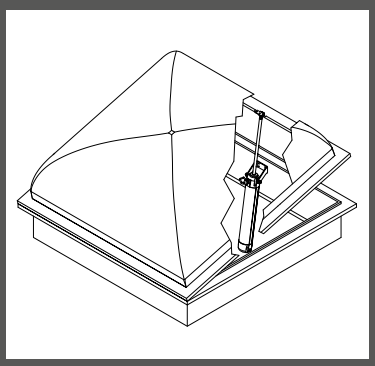

Installation on dome with fixing end bracket

Installation on dome with fixing end brackets

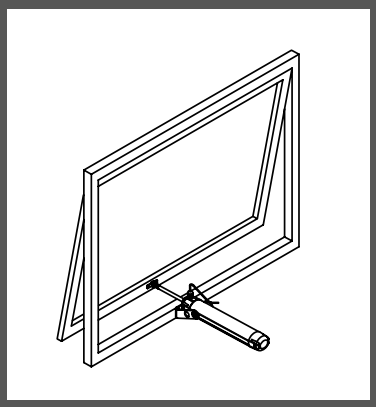

Installation on top hinged window without windowsill with fixing end bracket or with sliding bracket

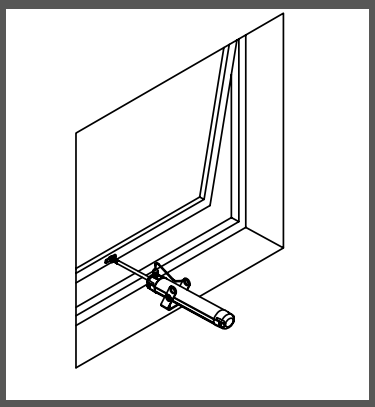

Installation on top hinged window with windowsill with sliding bracket

⚠ The instructions for a safe installation are included in the section “SECURITY WARNINGS”

Actuator dimensions

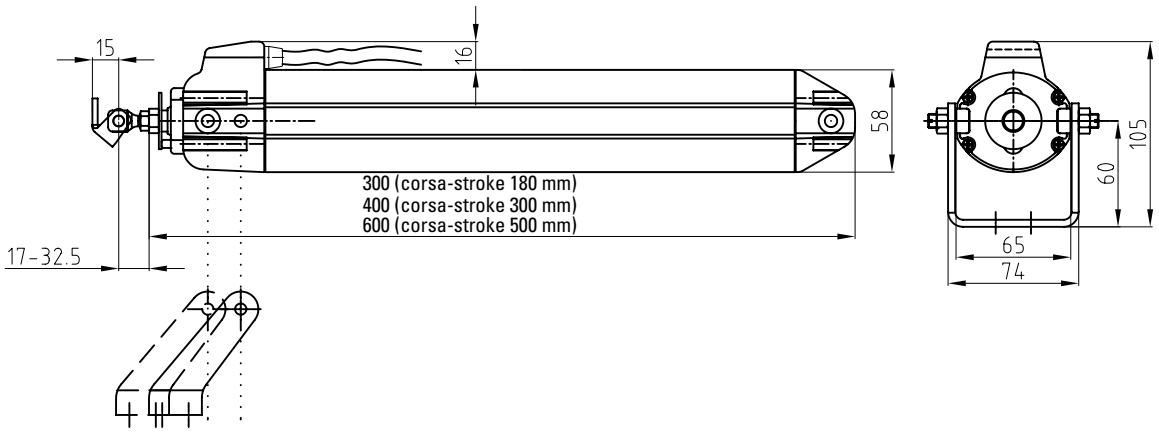

Accessories (can be ordered also separately)

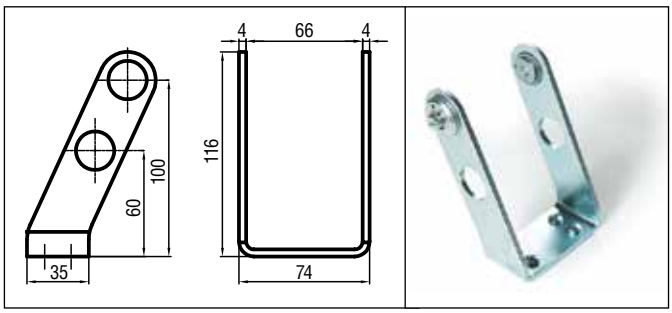

Sliding steel brackets part No. 40536W

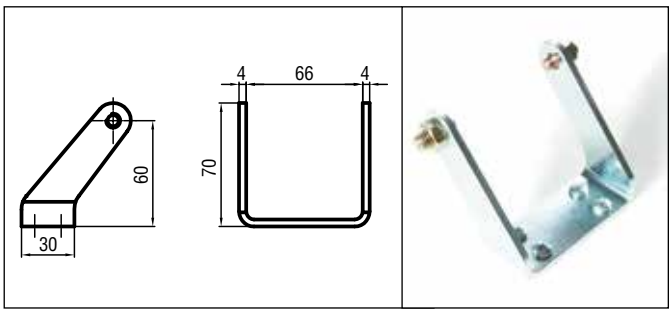

Fixing steel end bracket part No. 81559R

ULYSSES

Linear spindle actuator - Force in push action 650 N - Stroke 180 and 300 mm

ULYSSES RWA version

MAIN FEATURES

- Minimum size: external diameter 34 mm
- Load transmission by rigid spindle
- Particulary indicated to operate sun blades
- High protection from atmospheric agents (IP65)
- Supplied with steel end bracket and connector. Front or back fixing possibility.
- Aluminum back bracket to be ordered separately part No. 35697P
- A kit to reduce the stroke is available part No. 40735V
- Special triangular brackets and magnetic locking device available for installation on SHEV

Special version Ulysses RWA with all external parts in aluminum suitable for installation on **Smoke and Heat Exhaust Ventilators (SHEV)** in conformity to standard **EN 12101-2** and tested by Istituto Giordano.

Actuators dimensions

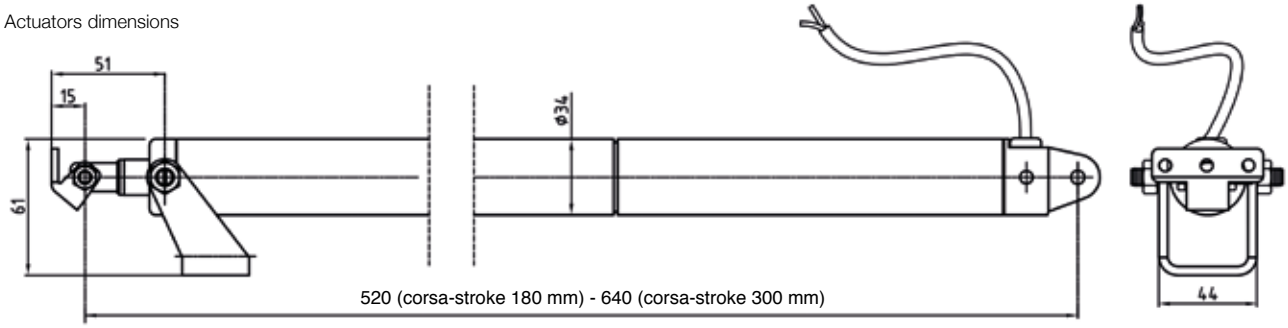

VOLTAGE SUPPLY	24 Vdc ± 10%
ELECTRIC CONNECTION	2 wires
OPERATION	by polarity inversion
STROKE	180/300 mm
FORCE (in push and pull action)	650 N
SPEED	6 mm/s
CURRENT ABSORPTION (with max load)	~1 A
PARALLEL CONNECTION	Yes
LIMIT STOP	Electronic
PROTECTION CLASS	IP65

PART No.	Stroke 180 mm	Stroke 300 mm
SILVER ANODIZED	40759Z	40760A
ULYSSES RWA	41767F	41718I

Installation examples

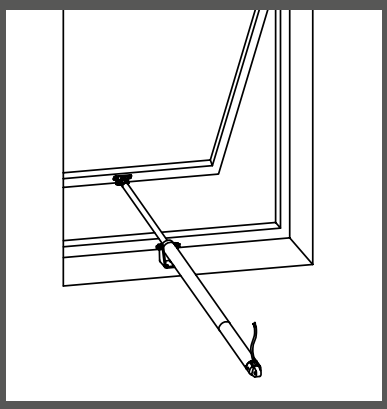

On top hinged window with windowsill with end bracket included

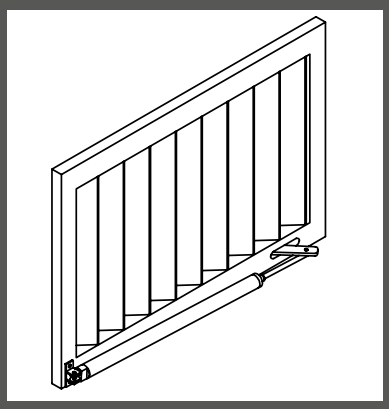

Installation on vertical sun blades with back fixing bracket part No. 35697P

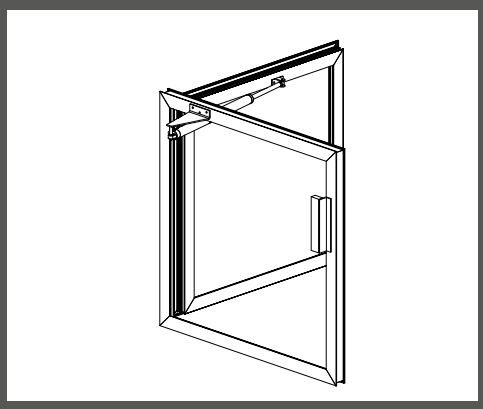

Installation on 90 degrees opening SHEV (side hung windows open inwards or outwards) using triangular brackets, front stainless steel connector and magnetic locking device.

On dome with fixing end bracket included

On horizontal louvre with back fixing

Magnetic locking device available in case of installation on SHEV, part No. 41925G (brackets included)

⚠ The instructions for a safe installation are included in the section “SECURITY WARNINGS”

SPECIFICATION PROSPECTS

Electric linear actuator Ultraflex Control Systems named Ulysses - Load transmission by rigid spindle, stroke 180 mm or 300 mm, external diameter 34 mm, fixing bracket included. Force 650 N. Protection class IP 65. Voltage supply 24 Vdc. Parallel connection. Electronic safety limit stop.
Casing in silver anodized.

Accessories

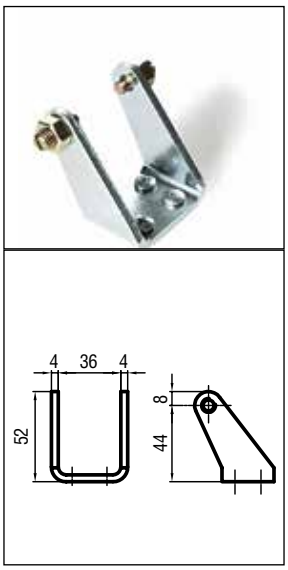

Steel end bracket included (No accessories included in Ulysses RWA version)

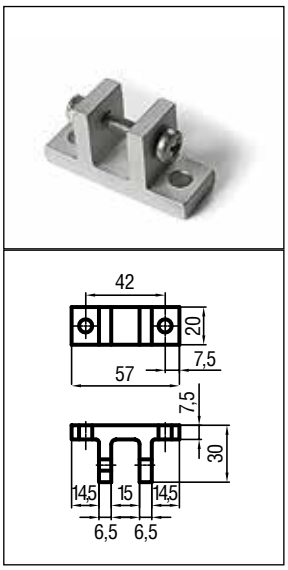

Aluminium back bracket part No. 35697P

Kit to reduce the stroke part No. 40735V

Galvanized steel connector kit to fix the spindle on the vent (included).

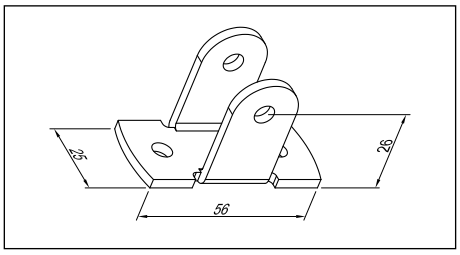

Front stainless steel connector part No. 41927I

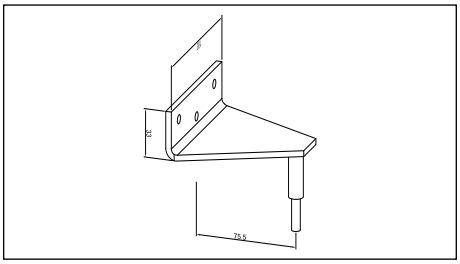

Short triangular bracket (75,5mm) part No. 41924F
Long triangular bracket (100,0 mm) part No. 41923E

T-RACK

Linear rack actuators - Force in push action 1000/2000 N - Stroke 350, 550, 750 and 1000 mm

- 12 mm square rack transmission.
- Supplied with 1,5 m cable.
- Available end brackets or sliding brackets (to be ordered separately); the dovetail slide allows the fixing on the whole length of the T-Rack actuator.
- Available on request:
  - 1200 mm stroke
  - F-SIGNAL versions with opening and closing feedback signal (free potential, maintained contact), activated by the current limit.

24 Vdc version is suitable for installation on **Smoke and Heat Exhaust Ventilators (SHEV)** i in conformity to European Standard **EN 12101-2** and tested by Istituto Giordano.

MULTIPLE SYSTEMS

• For large domes/top hinged windows or to provide more stability, the T-Rack actuator can be used in the **Dual T-Rack** version, providing two push points on the same vent. For each system assembly are necessary 1 T-Rack actuator, 1 T-Rack group, 1 connecting rod and 2 end fix brackets (part No. 41760Y)
• For large domes/top hinged windows that require double pushing force, coupled by connecting rods, **Double T-Rack** system is available. Please contact our Commercial Department.
• For special multiple application when speed synchronization or more power is required, max 4 actuators **Synchro T-Rack** can be used, each one providing 1000 N force. Synchro T-Rack version is equipped with an integrated speed synchronization control board, avoiding the installation of an external control box and metallic rod between the actuators.

CONNECTING ROD:

Diameter 12 mm in stainless steel. Quick clutch: fixing accessories are not necessary.
Available different lengths for following distance beetween racks:

PART No.	
1050 mm	40231B
1550 mm	40232C
2050 mm	40233D

	T-RACK 230 V AC	T-RACK 24 V DC	SYNCHRO T-RACK 24 V DC
VOLTAGE SUPPLY	230 Vca ± 10%	24 Vdc ± 10%	24 Vdc ± 10%
ELECTRIC CONNECTION	3 wires + earth	2 wires + signalling	5 wires
OPERATION	-	by polarity inversion	by polarity inversion
FORCE IN PUSH ACTION	1000 N	1000 N	1000 N
FORCE IN PULL ACTION	1000 N	1000 N	1000 N
SPEED	~12,5 mm/s	~12,5 mm/s	~12,5 mm/s
CURRENT ABSORPTION (with max load)	0,22 A	1,5 A	1,5 A
PARALLEL CONNECTION	Yes	Yes	Yes
LIMIT STOP	Electronic	Electronic	Electronic
SAFETY STOP	Electronic	Electronic	Electronic
FEEDBACK SIGNAL	-	Open/Close	-
PROTECTION CLASS	IP65	IP65	IP65
COLOUR	Silver anodized	Silver anodized	Silver anodized

PART No.				**T-RACK GROUP**
STROKE 350 mm	41740E	41745J	41750O	41755T
STROKE 550 mm	41741F	41746K	41751P	41756U
STROKE 750 mm	41742G	41747L	41752Q	41757V
STROKE 1000 mm	41743H	41748M	41753R	41758W

NOTE: brackets not included - to be ordered separately

STROKE	L
350	523
550	723
750	923
1000	1173

Actuator dimensions

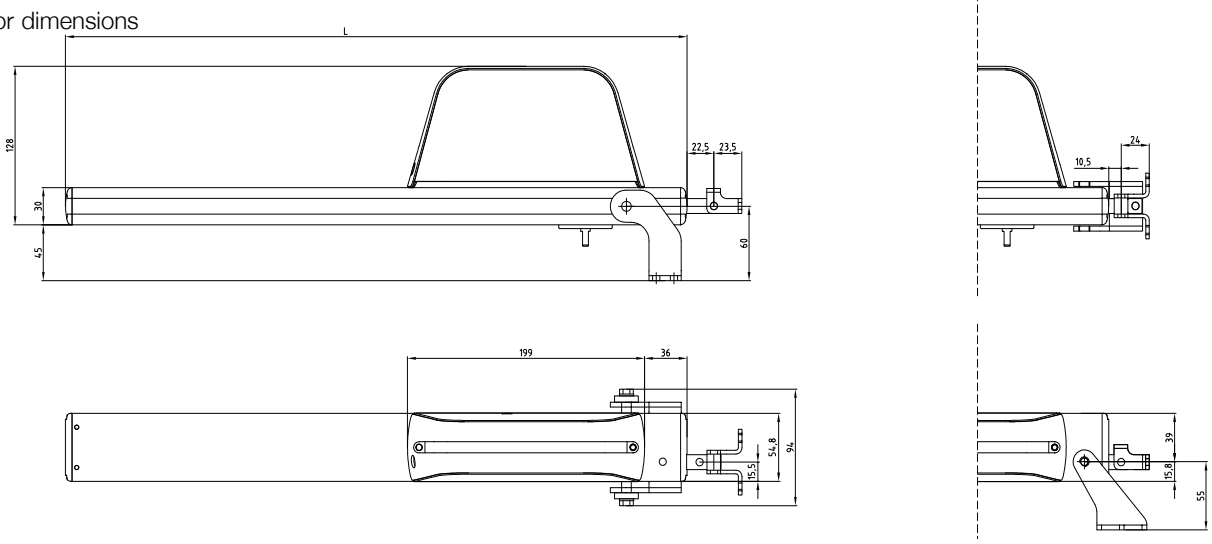

T-Rack actuator with sliding bracket part No. 41761Z

T-Rack actuator with end bracket part No. 41760Y

Accessories

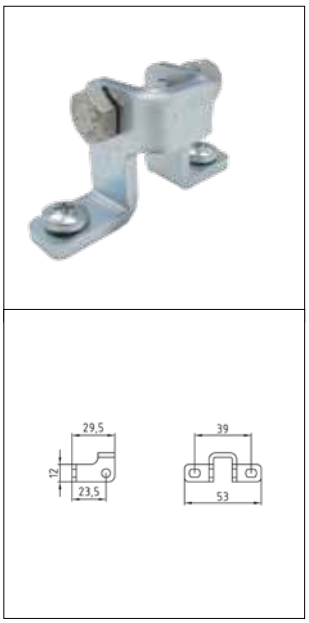

Connector kit to fix the rack to the vent (included)

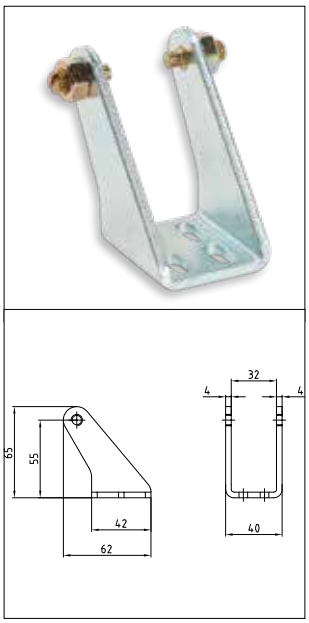

End bracket part No. 41760Y

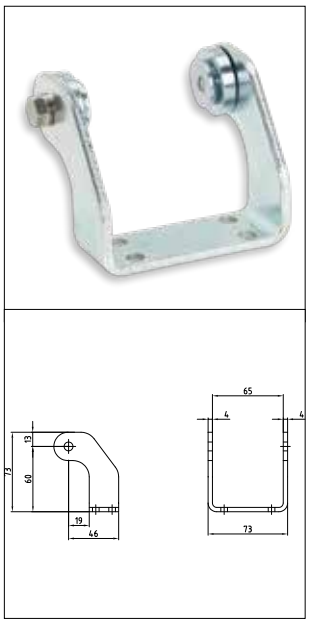

Sliding bracket part No. 41761Z

Installation examples

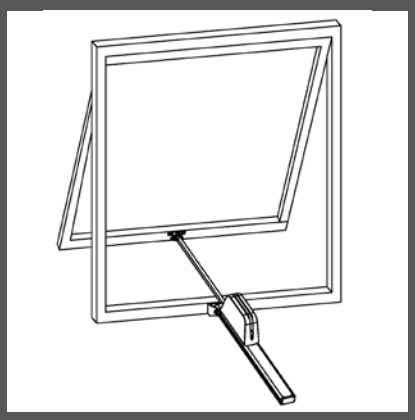

Installation on top hinged window

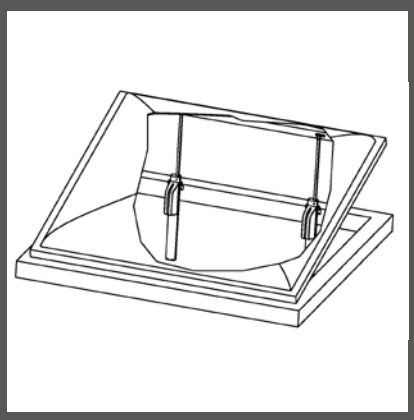

Installation on domes

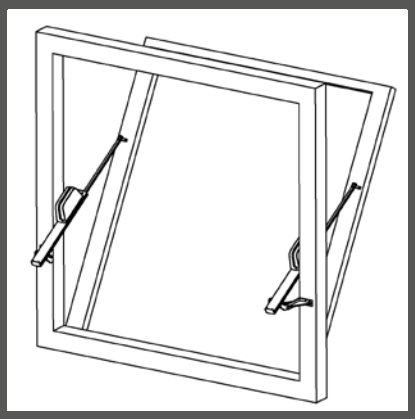

Installation on bottom hinged windows outward opening

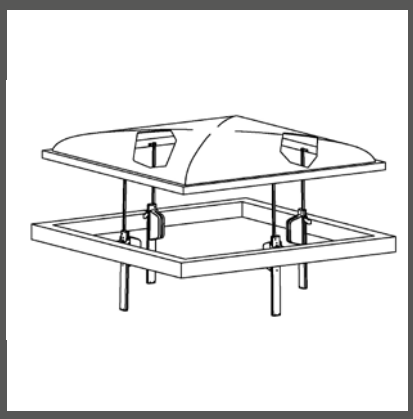

Installation on vertically opening domes

⚠ The instructions for a safe installation are included in the section “SECURITY WARNINGS”

SPECIFICATION PROSPECTS
T-RACK

Electric linear actuator Ultraflex Control Systems. Available strokes 350, 550, 750 or 1000 mm. Voltage supply: 230 Vac or 24 Vdc. Electronic
safety limit stop and electronic stop in the intermediate positions. Parallel connection. Color: silver anodized. Force 1000 N

DUAL T-RACK

System assembly with two push points composed by one T-Rack Actuator, one T-Rack Group and a connecting rod. Force 1000 N

DOUBLE T-RACK

System assembly with two push points composed by one T-RACK Actuator, one AUX T-RACK Actuator and a connecting rod. Force 2000N.

SYNCHRO T-RACK

Electric linear actuator Ultraflex Control Systems with integrated speed synchronization control board up to four push points on the same strucutre without connecting rod. Force 1000 N each actuator.

RACK

Linear rack actuators - Force in push action 650/1500 N - Stroke 180, 350, 550, 750 and 1000 mm

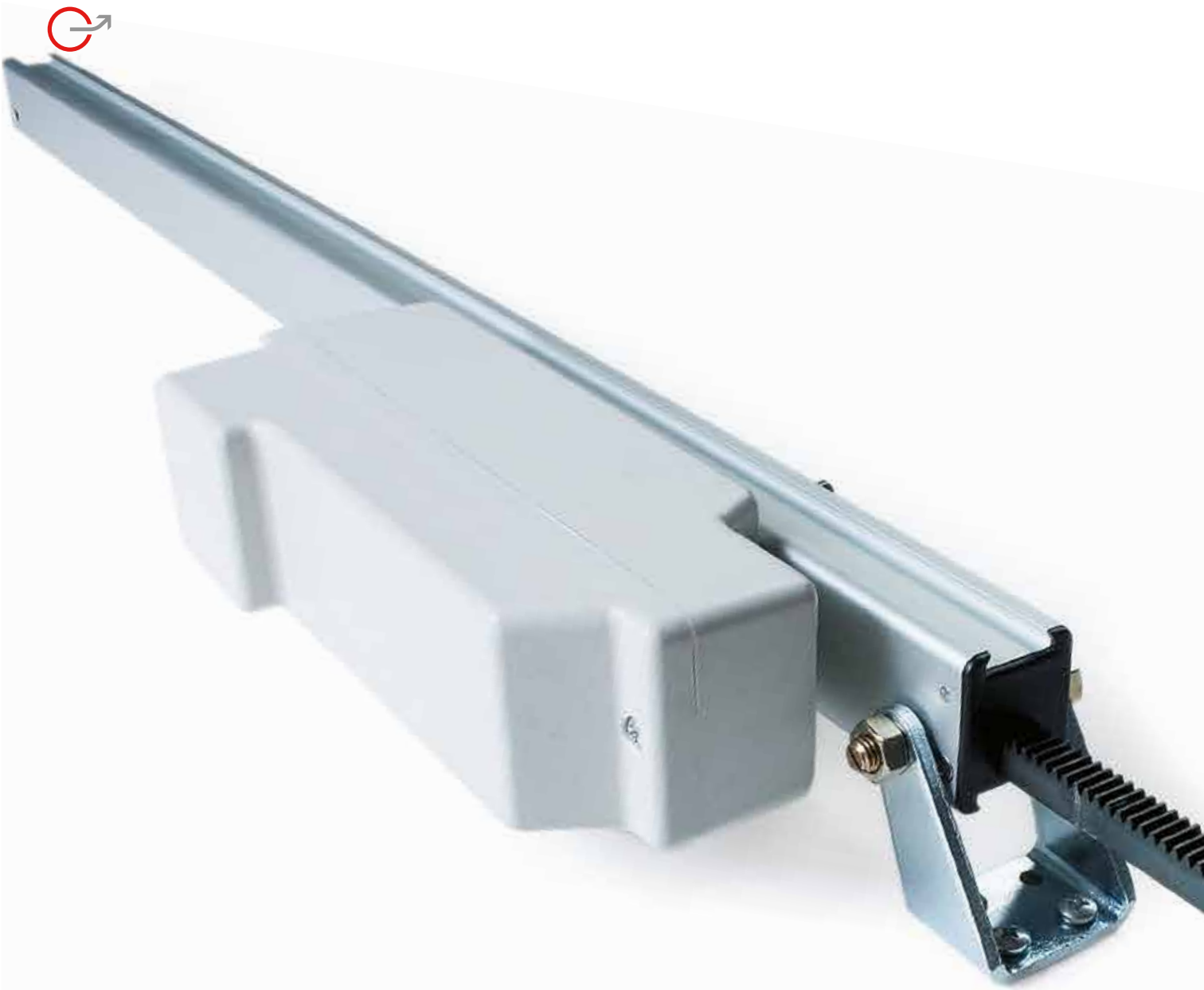

- 10 mm square rack transmission for stroke 180 mm, 350 mm, 550 mm and 12 mm square rack transmission for stroke 750 mm e 1000 mm.
- Supplied with 1,5 m cable.
- Available end brackets or sliding brackets (to be ordered separately); the dovetail slide allows the fixing on the whole length of the rack actuator. Not for multiple systems.

24 Vdc version is suitable for installation on **Smoke and Heat Exhaust Ventilators (SHEV)** in conformity to European Standard **EN 12101-2** and tested by Istituto Giordano.

MULTIPLE SYSTEMS

- For large domes/top hinged windows or to provide more stability, the Rack actuator can be used either in the **Dual Rack** or in the **Double Rack** version, providing two or more push points on the same vent. Double Rack provides the double of the force
- **Dual Rack:** push force 650 N (230 Vac) - 750 N (24 Vdc). For each system assembly are necessary 1 Rack actuator, 1 Rack group, 1 connecting rod and 2 end brackets (part No. 40234E see next page)
- **Double Rack:** push force 1300 N (230 Vac) - 1500 N (24 Vdc) For each system assembly are necessary 1 Rack actuator, 1 Auxiliary Rack actuator in parallel connection, 1 connecting rod and 2 end brackets (part No. 40234E see next page)
- **Other multiple systems:**
  It is also available a Rack Group Double Pivot for system assembly providing 3 or more push points

	RACK 230 V AC	RACK 24 V DC
VOLTAGE SUPPLY	230 Vac ± 10%	24 Vdc ± 10%
ELECTRONIC CONNECTION	3 wires + earth	2 wires + signalling
OPERATION	-	by polarity inversion
FORCE IN PUSH ACTION	650 N	750 N
FORCE IN PULL ACTION	350 N	650 N
SPEED	~8 mm/s	~8 mm/s
CURRENT ABSORPTION (with max load)	0,1 A	1 A
PARALLEL CONNECTION	Yes	Yes
LIMIT STOP	Electronic	Electronic
SAFETY STOP	Electronic	Electronic
FEEDBACK SIGNAL	-	Open/Close
PROTECTION CLASS	IP55	IP55
COLOUR	Silver anodized	Silver anodized

PART No.		
STROKE 180 mm	40209F	40400A
STROKE 350 mm	40211T	40217D
STROKE 550 mm	40213V	40219H
STROKE 750 mm	40789D	40791F
STROKE 1000 mm	40790E	40792G

PART No.	RACK GROUP	RACK GROUP DOUBLE PIVOT	AUXILIARY RACK 230 VAC	AUXILIARY RACK 24 VDC
STROKE 180 mm	40223B	40379W	40631P	40636A
STROKE 350 mm	40225D	40380U	40632S	40637C
STROKE 550 mm	40227F	40381V	40633U	40638E
STROKE 750 mm	40754U	40851N	40847J	40849L
STROKE 1000 mm	40755V	40852O	40848K	40850M

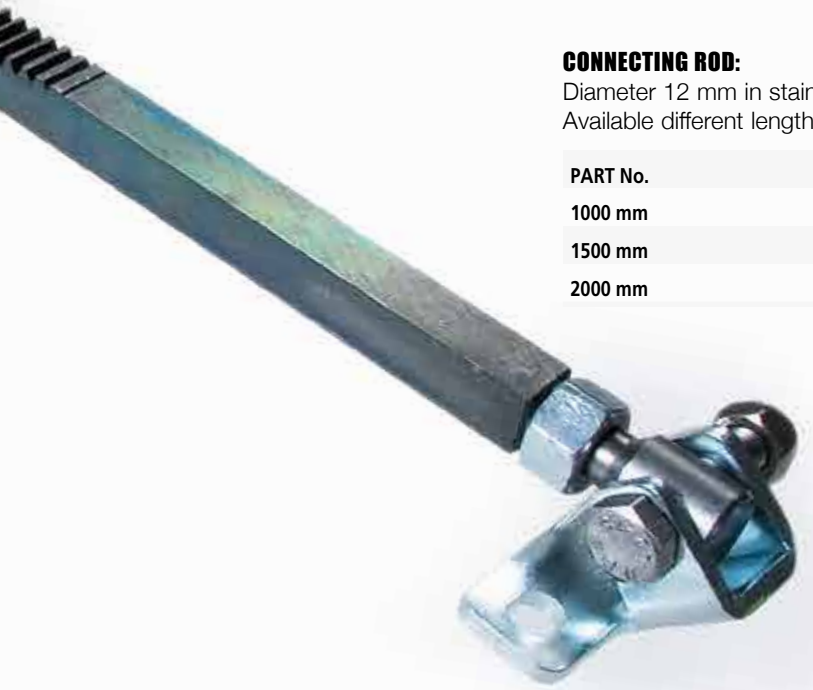

CONNECTING ROD:
Diameter 12 mm in stainless steel. Quick clutch: fixing accessories are not necessary. Available different lengths for following distance beetween racks:

PART No.	
1000 mm	40231B
1500 mm	40232C
2000 mm	40233D

NOTE: brackets not included - to be ordered separately

STROKE	A
180	400
350	570
550	770
750	970
1000	1220

Actuator dimensions

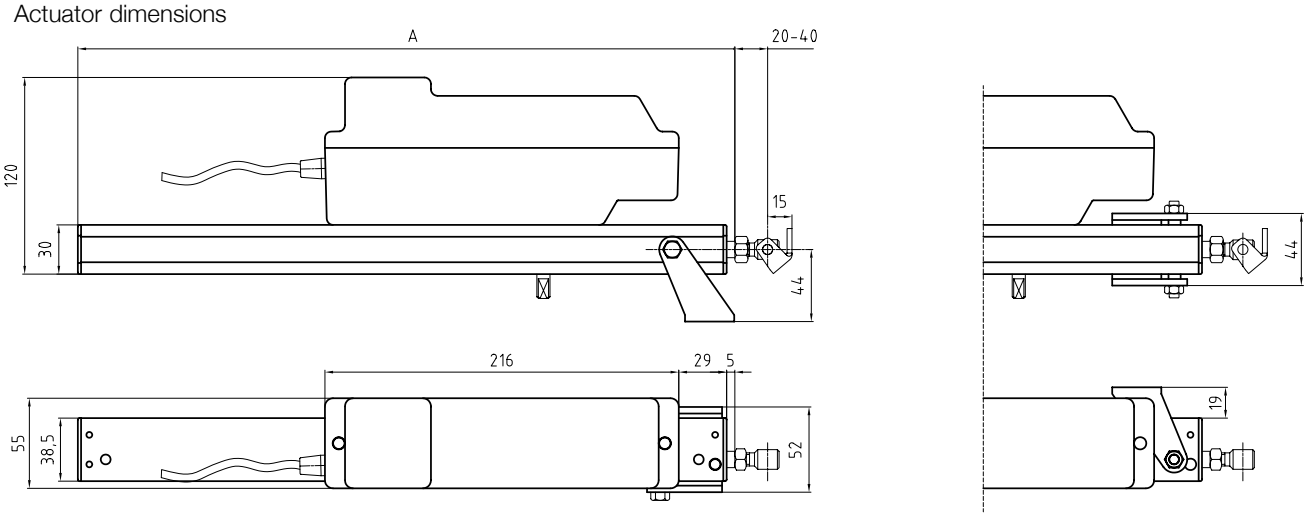

Rack actuator with sliding bracket part No. 40235F

Rack actuator with end bracket part No. 40234E

Accessories

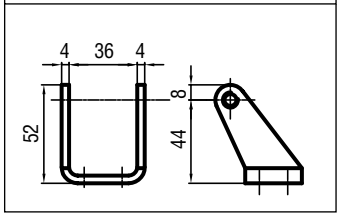

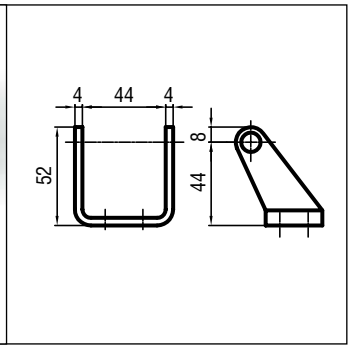

Sliding bracket part No. 40235F. It allows the fixing for the whole length of the actuator. To use only for single Rack.

End bracket part No. 40234E.
To use for Dual Rack and Double Rack system or single Rack.

Connector kit to fix the rack on the vent
(included)

Installation examples

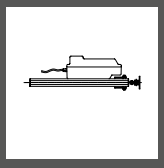

Single Rack

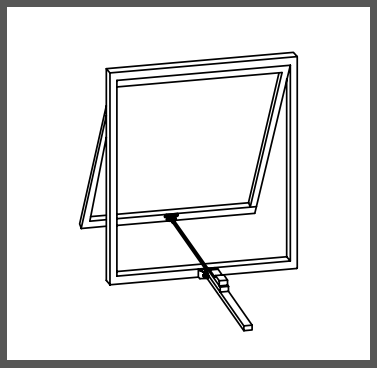

On top hinged window without windowsill with front fixing through sliding bracket part No. 40235F

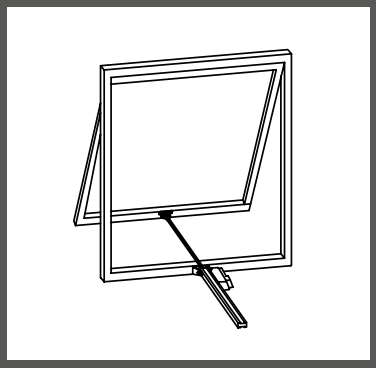

On top hinged window without windowsill with front fixing through end bracket part No. 40234E

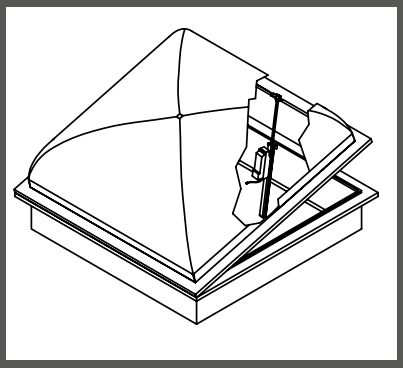

On domes with front fixing through sliding bracket part No. 40235F

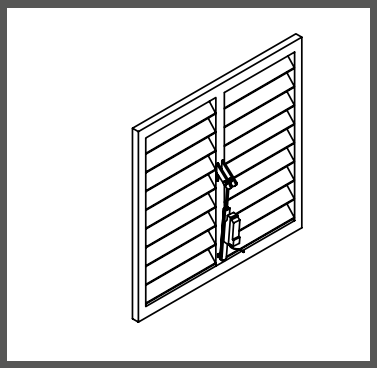

On horizontal louvres with back fixing through sliding bracket part No. 40235F

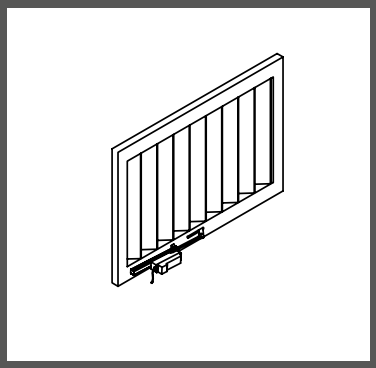

On vertical sun blades with back fixing through sliding bracket part No. 40235F

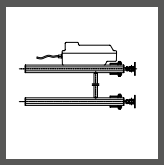

Dual Rack

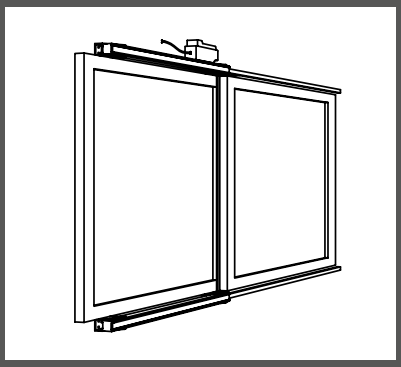

Installation of the Dual Rack on sliding windows with end bracket part No. 40234E and connection of the two actuators through rod

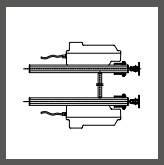

Double Rack

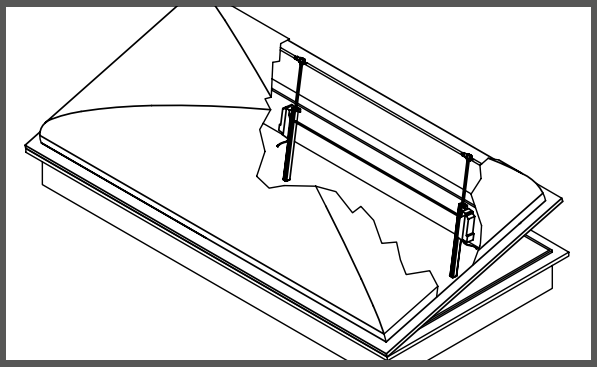

Installation of the Double Rack on domes with end bracket part No. 40234E and connection of the two actuators through rod

⚠ The instructions for a safe installation are included in the section “SECURITY WARNINGS”

SPECIFICATION PROSPECTS
RACK

Electric linear actuator Ultraflex Control Systems. Available strokes 180, 350, 550, 750 or 1000 mm. Voltage supply: 230 Vac or 24 Vdc. Electronic
safety limit stop and electronic stop in the intermediate positions. Parallel connection. Color: silver anodized. Force 650 N/750 N

DUAL RACK

System assembly with two push points composed by one Rack Actuator, one Rack Group and a connecting rod. Force 650 N/750 N

DOUBLE RACK

System assembly with two push points composed by one Rack Actuator, one auxiliary Rack and a connecting rod. Force 1300 N/1500 N.
Systems with more than two push points can be obtained with a Rack Group double pivot.

ENTRAPMENT PROTECTION SYSTEMS EPS

Power actuated window protection system

C-SV control panel

CRM control panel

Power supply

Infra-red sensor
part No 41343J

BMS building management
system or fire alarm system

Push button part No 41013B

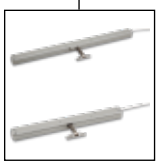

Quasar
Vega

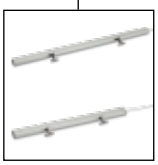

Twin Quasar
Twin Vega

Supermaster

Stile

Max

Ulysses

Rack
T-Rack

EPS Entrapment Protection System provides protection to people close to the automated window area, also for children or people with reduced attention and response capacity, above all in case of accessible windows or with automatic control without visual contact.
The infra-red active sensor, or other presence sensor, gives a signal to the control unit in case of foreign presence; the EPS system reverses the closing movement for 3 seconds to release possible objects or body parts entrapped in the window, then stops the power to the actuator.
EPS can also provide the visual and acoustic signal in case of intervention of the presence sensor; moreover it is possible to continue the closing action as soon as the foreign presence disappears. It is possible to connect more than one actuator and/or sensor to the control unit.

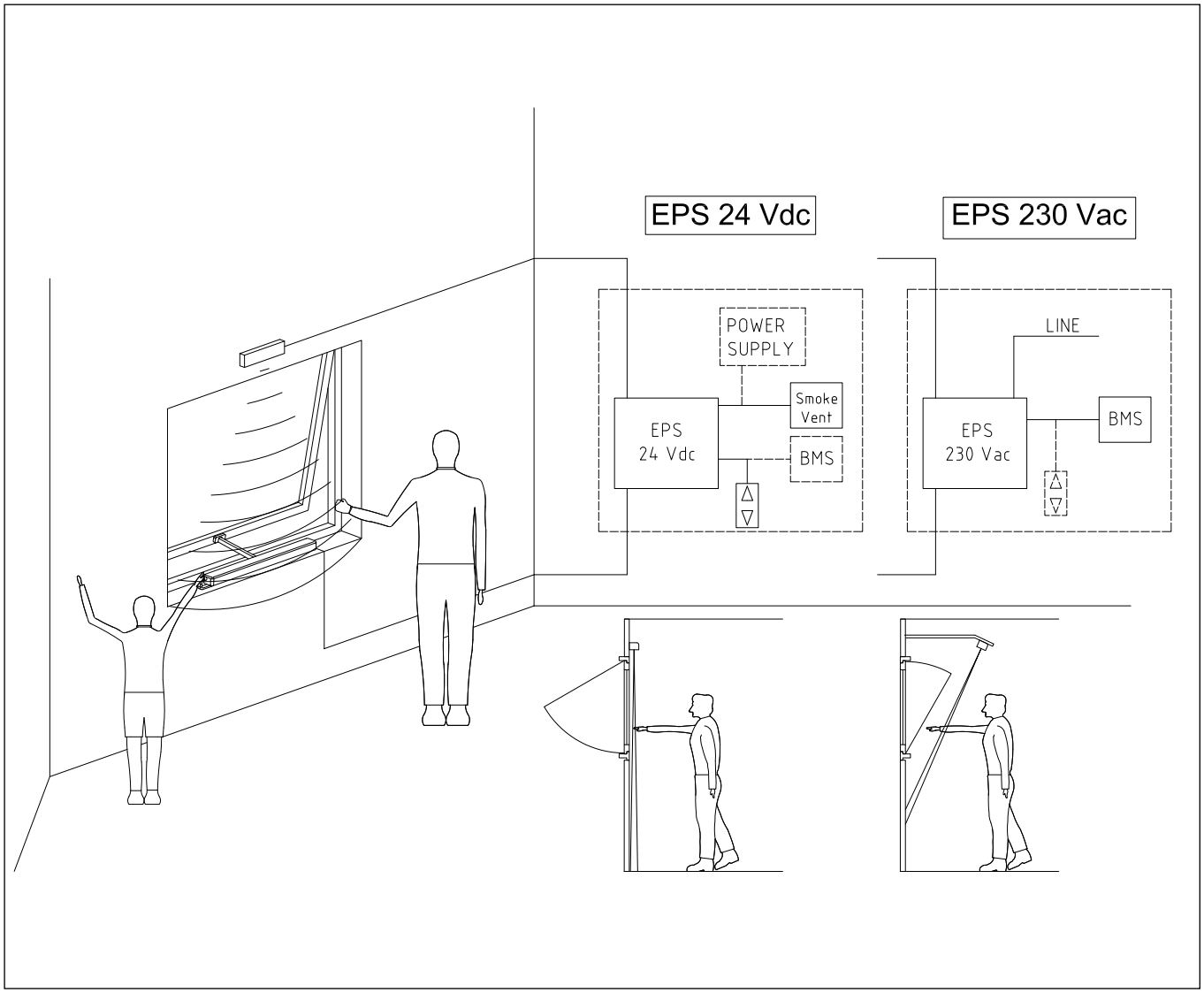

⚠ The instructions for a safe installation are included in the section “SECURITY WARNINGS”

EPS 24 Vdc
PART No. 41342I
Control unit for 24 Vdc actuators. Inputs: feeder; EFC control panel; push button or BMS system.
Dimensions: 115 x 155 x 75 mm

EPS 230 Vac
PART No. 41341H
Control unit for 230 Vac actuators. Inputs: line – push button or BMS system.
Dimensions: 115 x 155 x 75 mm

PRESENCE SENSOR
PART No. 41343J
The infra-red presence sensor gives a signal to the EPS control unit in case of foreign presence
Dimensions: 221 X 63 X 30 mm

For information about C-SV control panels and CRM control panels, see the related sections; for power supply and push button, see CONTROL ACCESSORIES section.

CONTROL PANEL CRM

Control unit and meteorological detection system

Push button
part No. 41013B

KP Push button
part No. 40770K

TH Thermostat
part No. 40675K

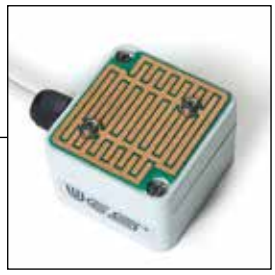

RS Rain Sensor
part No.40450K

WS Wind detector
part No. 37185V

RC Remote Control
part No. 40771L

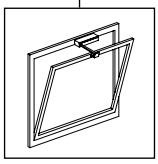

Chain
actuator

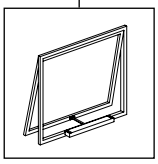

Chain
actuator

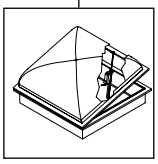

Rack actuator

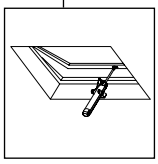

Spindle
actuator

⚠ The instructions for a safe installation are included in the section “SECURITY WARNINGS”

CRM CONTROL PANEL

The meteorological CRM control panel, controls up to four actuators or group of actuators independently and, allows the automatic closing of the windows in case of rain or wind alarm conditions detected by the sensors or by the intervention of the thermostat.

	CRM1	**CRM2**
INPUT VOLTAGE SUPPLY	230 Vac	230 Vac
OUTPUT VOLTAGE SUPPLY	24 Vdc	230 Vac
OUTPUT (max load each output)	4 for 1 A	4 for 1,5 A
Technical features of the connected actuators:		
ELECTRIC CONNECTION	2 wires	3 wires + earth
OPERATION	by polarity inversion	
ABSORPTION (with max load)	4 A	6 A
PART NO.	40769J	40820I

CONTROL PANEL CRM - ACCESSORIES

KP PUSH BUTTON
PART No. 40770K
Using this push button it is possible to select and drive separately the four actuators or groups of actuators, or operate the four lines contemporary.

RC REMOTE CONTROL
PART No. 40771L
On the KP push button there is an infra-red receiver that allows the use of the RC remote control having the same functions of the push button. The remote control is supplied with a proper wall support.

PUSH BUTTON
PART No. 41013B
It is possible to operate manually all the actuators contemporary, connecting to the CRM a standard double push button with return spring. The closing and opening inputs are memorized for three minutes in order to allow also at the actuators with very long stroke to complete their movement.

The control panel is arranged for the connection of three sensors that control the weather events:

TH THERMOSTAT
PART No. 40675K
The thermostat, if present, has the priority on the manual control: if the temperature is superior to the set one, the windows open, if inferior the windows close; to disable the thermostat act on its selector.
Particularly suitable for conservatories and mansards. Built in on/off switch.

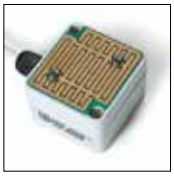

RS RAIN SENSOR
PART No. 40450K
In case of rain, the rain sensor sends the signal for window automatic closing that is indicated by a red LED in front of the control panel; it is possible to disconnect this sensor acting on the on/off switch on the front of the control panel. Further to the sensor intervention it is not possible, without disabling this sensor, to control the actuators until 8 min. after the end of the event.
A heating element prevents dew formation on the surface. Particularly suitable for roof windows and sloping top hinged windows.

WS WIND DETECTOR
PART No. 37185V
It emits a variable signal according to the wind intensity and acts on the control panel as the rain sensors do. With reference to the anemometer, it is possible to choose, using a rotating selector with 10 positions, at which wind speed the control panel operates the closing. Selecting 0 the anemometer is disabled while positions from 1 to 9 correspond to Beaufort wind force scale.

SOLAR POWER SYSTEM ULTRA 24 VDC

Compact solar charging and power unit for 24Vdc motors, equipped with batteries and Radio Receiver: no need to run wires down to power supplies or wall switch

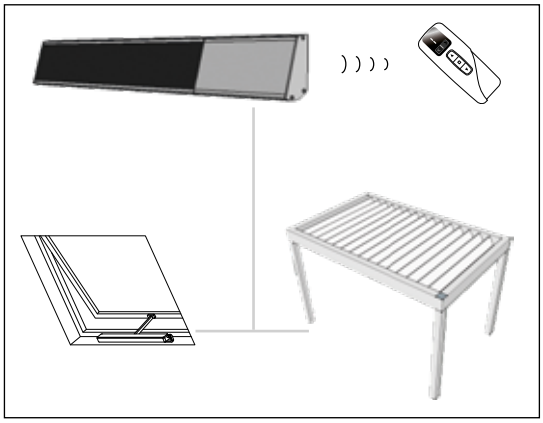

Very convenient solution for installations:
- where it is difficult to run wires (renovation in residential houses or ancient buildings, roof windows, replacement of actuators with different electrical connection/voltage supply …)
- without power sources (conservatories, sunrooms, greenhouses, pergolas, sun blades).

Dimensions: 535 x 87 x 37 mm
2 mounting clips for quick and easy installation
Cable length: 300 mm
Output: 24 Vdc/2A
2,5 Watt Solar panel, Multichristaline
1500 mAh LiFePO4 Battery

SOLAR ULTRA 24 Vdc	41870D
RADIO REMOTE CONTROL 1 channel	41871E
RADIO REMOTE CONTROL 9 channels	41872F

SMOKE VENTILATION CONTROL PANELS

Control unit for smoke and heat exhaust ventilators including meteorological detection and comfort ventilation

A very versatile range of smoke ventilation control panels, provided of back-up batteries: they operate 24 Vdc actuators for smoke and heat extraction in case of fire, and control the automation of single or multiple windows for natural ventilation even in a multy-storey building.

The opening command for smoke extraction is controlled by smoke detectors, emergency push buttons, fire alarm systems or Building Management Systems (BMS) by “free potential – normally closed” inputs. Fire alarm conditions and control panel faults are signalled on the emergency push button.

To provide comfort and energy saving, natural ventilation is granted operating automatically the windows according to the environmental conditions detected by the sensors. In addition, for natural ventilation, windows can be manually controlled by zones through local push-buttons.

C-SV and C-SV IB control panels have been designed, tested ad certified according to EN 12101 part 10 and prEN 12101 part 9 by IFT Rosenheim (pending test).

POWER

VOLTAGE SUPPLY INPUT	100-250 Vac, 50-60 Hz
VOLTAGE SUPPLY OUTPUT	24 Vdc (±25%)
VOLTAGE OUTPUT OPERATION	Polarity inversion
AUX VOLTAGE OUTPUT	24 Vdc
NOMINAL CURRENT	4 A / 8 A / 13 A / 20 A
BACK UP BATTERY	2x 12 Vdc (sealed lead-acid batteries)

FEATURES

SMOKE VENT ZONE	1
NATURAL VENT ZONE	2
SMOKE/HEAT DETECTOR	Max 10
EMERGENCY PUSH BUTTON	Max 10 *(integrated push button on the front of the control panel on IB version only)*
EMERGENCY CLOSING BUTTON	Max 10 (normally open contact)
EMERGENCY OUTPUT	Clean contact *(e.g.: acoustic alarm)*
NATURAL VENT PUSH BUTTON	External *(integrated push button on the front of the control panel on IB version only)*
RAIN SENSOR	Max 1
WIND SENSOR	Max 1
CO2 SENSOR	Max 1
THERMOSTAT	Max 1

NOTE: the summarized values on the above table might be varied according to the final installation. For any further information please contact our sales department.

SMOKE VENTILATION CONTROL PANELS

Control unit for smoke and heat exhaust ventilators including meteorological detection and comfort ventilation

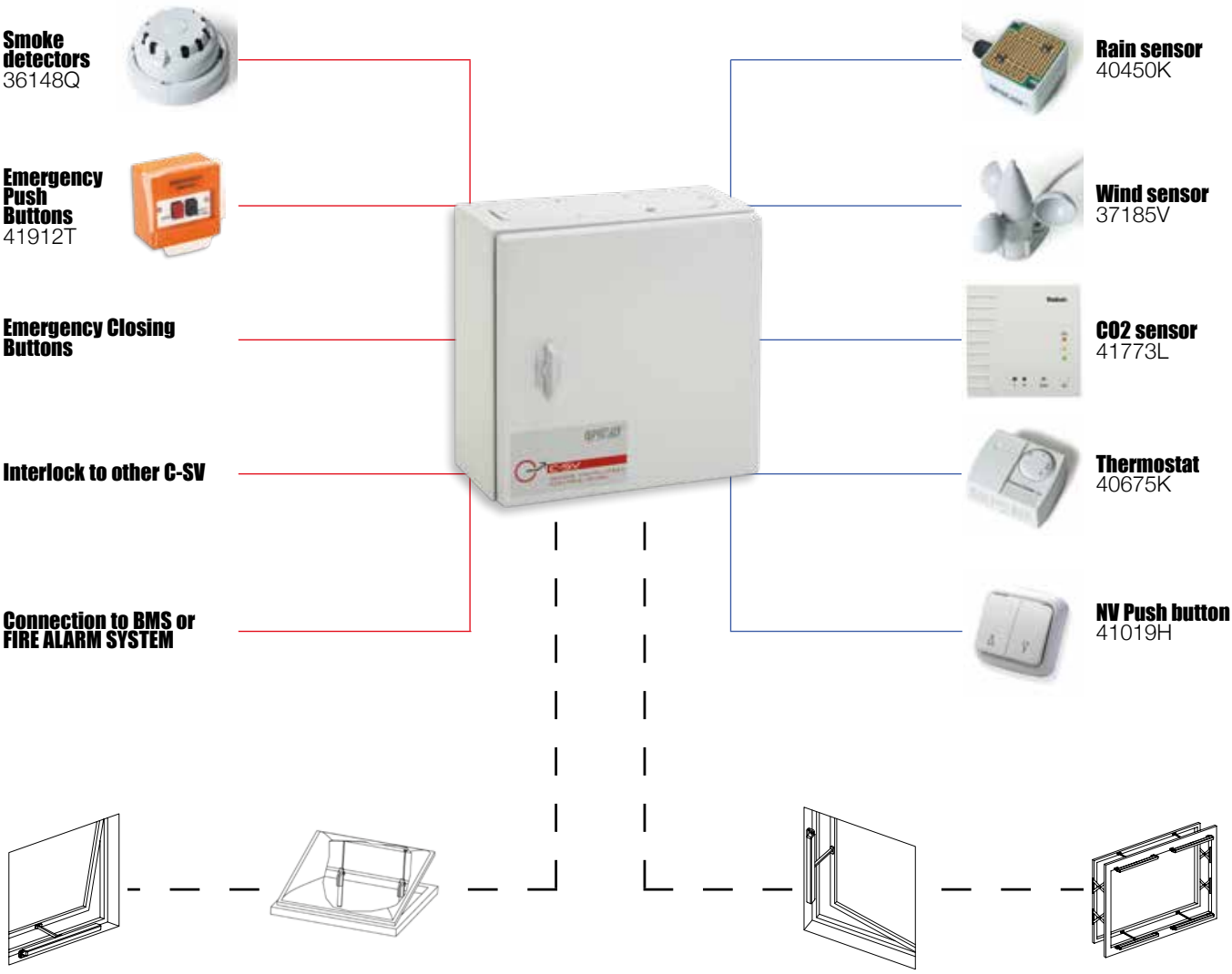

DESCRIPTION	NOMINAL CURRENT	DIMENSIONS (mm)	PUSH BUTTON	BATTERIES	PART No.
C-SV 4A	4A	300 x 300 x 150	Not included	Included	41736A
C-SV 8A	8A	300 x 300 x 150	Not included	Included	41737B
C-SV 13A	13A	400 x 400 x 150	Not included	Included	41918Z
C-SV 20A	20A	400 x 400 x 150	Not included	Included	41874H
C-SV IB 4A	4A	300 x 300 x 150	Integrated on the front of the control panel	Included	41738C
C-SV IB 8A	8A	300 x 300 x 150	Integrated on the front of the control panel	Included	41739D
C-SV IB 13A	13A	400 x 400 x 150	Integrated on the front of the control panel	Included	41919A
C-SV IB 20A	20A	400 x 400 x 150	Integrated on the front of the control panel	Included	41875I

ACCESSORIES FOR SMOKE VENT CONTROL

OPTICAL SMOKE DETECTOR
PART NO. 36418Q
Smoke detection by infrared light diffusion for Tyndall effect. It is certified according to the UNI EN 54 - 7/9 regulations. Alarm signal through the red led.
RESPONSE TIME 3 sec approx.
VOLTAGE SUPPLY 24 V (min. 10 V, max. 30 V) TEMPERATURE RANGE -10° + 80° C
DEGREE OF HUMIDITY < 95% MAX AIR SPEED 10 m/s DETECTED SURFACE 40 m2
A frequent cleaning, especially in dusty environments, is recommended.

EMERGENCY PUSH BUTTON
PART NO. 41912T
It's necessary to break the safety strip to open the glass and operate it. Emergency push button allow to control by LEDs the status of the system, reset the control panels and close the window at the end of the emergency.

ACOUSTIC ALARM DEVICE
PART NO. 40892C
Outward self-fed siren 24 V, stainless steel box with polycarbonate cover, sonorous power 115 dB, voltage supply 24 V - 2 A, battery 12 V, 2 Ah.
Dimensions: 236x280x99 mm

FLUSH MOUNT DOUBLE PUSH BUTTON
PART No. 41019H
Once connected to control panel allows to operate all window for natural ventilation.

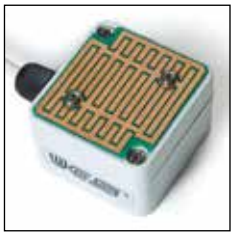

RS RAIN SENSOR
PART No. 40450K
In case of rain, the rain sensor sends the signal for window automatic closing.

WS WIND DETECTOR
PART No. 37185V
It emits a variable signal according to the wind intensity and acts on the control panel as the rain sensors do.

CO2
PART No. 41773L
The CO2 sensor, if present, has the priority on the manual control. Suitable for conference and meeting rooms, offices, schools/nurseries, passive and low-energy housing.
2 switch outputs CO2 controlled for 2 stage control, with manual and automatic mode as well as display of switching status.
3x 0–10 V outputs for CO2, temperature and relative humidity.
Compatible C-SV, IB-SV only.

TH THERMOSTAT
PART No. 40675K
The thermostat opens or closes windows when temperature settings are exceeded. Built in on/off switch.

DIAGNOSTIC KIT (CABLE + SOFTWARE)
PART No. 41853M
In the event of anomalies or installation problems, it is possible to interrogate the C-SV control panels using a special diagnostic USB cable connected to a simple computer. A dedicated software allows you to monitor in real time the operating parameters of the control panel (primary power supply, battery voltage, etc.) and to trace the origin of any faults by reading the associated error code.

BATTERIES FOR C-SV and C-SV IB
PART NO. 40911V
Spare part for C-SV and C-SV IB control panel 4A or 8A, formed by two pieces of 12 V, 4,5 Ah batteries.

PART NO. 41921C
Spare part for C-SV and C-SV IB control panel 13A or 20A, formed by two pieces of 12 V, 9 Ah batteries.

CONTROL ACCESSORIES

Accessories for electric actuators

FLUSH MOUNT DOUBLE PUSH BUTTON

PART No. 41013B
Once connected to control panel allows to operate all window for natural ventilation.

FLUSH MOUNT BIPOLAR PUSH BUTTON

PART No. 41014C
For the actuators with polarity inversion operation.
Max current 5 A.

WALL PUSH BUTTON WITH TWO BUTTONS

PART No. 41019H
For all the actuators with 3 wires operation.
Dimensions: mm 80x80x30

BOX FOR FLUSH MOUNT PUSH BUTTON

PART No. 83475J
For flush mount push button.

COUPLING CONTROL UNIT CP230

PART No. 41089V
It permits to control a couple of 230 Vac actuators (STILE, SINTESI 2000, SUPERMASTER 230 Vac, MAX). In case of sudden failure, or blockage of any of the two actuators the other will also be stopped. In case of automatic control (BMS-Building Management System) avoid repetitive commands.

RELAIS BOX (RB24-E)

PART No. 40995J
It allows to control 24 Vdc actuators (at polarity inversion) through a standard 3 wires operation (open-close-common) and a voltage supply up to 20 A in two outputs current absorption.
It can also be connected to control units UCS-CRM1 to expand the output load.
Dimensions: mm 154x113x75

SWITCHING POWER SUPPLY 24 Vdc

ITEM CODE	40775P	41526Y	40893D	40894E
INPUT VOLTAGE	85 - 264 Vac	90 - 264 Vac	85 - 264 Vac	85 - 264 Vac
OUTPUT VOLTAGE	24 Vdc	24 Vdc	24 Vdc	24 Vdc
OUTPUT CURRENT	3A (nominal current)	3.8A (nominal current)	8,4A (nominal current)	20A (nominal current)
DIMENSIONS	199x99x50 mm	91x90x55,6 mm DIN rail module	199x99x50 mm	185x120x92 mm

WEATHER CONTROL UNIT FOR 230 Vac ACTUATORS

PART No. 40490Y
The kit includes the operating device with anemometer and rain sensor that operates automatically in case of high wind intensity or rain. It controls the closing of one or more 230 Vac actuators, with a maximum total current absorption inferior to 2.25 A. A register permits to determine the wind sensibility.
Dimensions: ø 150 mm x 40 h

RADIO RECEIVER 230 Vac

PART No. 41735Z
Radio receiver for 230Vac actuator.
Includes two inputs for open and close button.
Power supply: 230Vac
Power: 350W
Dimension: 125 x 38 x 20 mm
IP44

RADIO RECEIVER 24 Vdc

PART No. 41734Y
Radio receiver for 24Vdc actuator.
Includes two inputs for open and close button.
Power Supply: 24Vdc
Nominal current: 4,0A
Dimension: 125 x 38 x 20
IP44

RADIO TRANSMITTER 6 CH

PART No. 41729T
Compatible with Stile-RF and Radio Receiver 230 Vac and 24 Vdc.
6 CH (open-stop-close) can operate up to 6 CH simultanusly and/or independently.

⚠ The instructions for a safe installation are included in the section “SECURITY WARNINGS”

PNEUMATIC CYLINDERS

Pneumatic systems for smoke and heat extraction

- The Redline cylinders are manufactured using corrosion-resistant materials.
- Suitable for smoke and heat exhaust systems according to the UNI EN 12101-2 standard.
- Double action cylinders, they can open and close.
- Provided with a mechanical locking device in the end stroke positions. It can be pneumatically or manually (pressing the corresponding end button) unlocked.
- On request (min. 50 pieces):
  - any intermediate stroke
  - rear feeding
  - cylinders without locking device
- Fixing brackets, accessories and connectors must be ordered separately
- The Redline cylinders can be used for ventilation where a compressed air system is available
- The installation of two cylinders on the same vent requires the version without locking device (stroke 500mm part No.40344H – stroke 700mm part No 40610F)

BORE	35 mm
ROD	Ø 12 stainless steel
MAX WORKING PRESSURE	20 bar
TEMPERATURE RANGE	- 30°+ 120°C
FEED	front
THRUST	1900 N a 20 bar
LOCK RESISTANCE	3000 N up to 300°C

PART No.	STROKE 300 mm	STROKE 500 mm	STROKE 700 mm	STROKE 1000 mm
	40083L	40085N	40087P	40090K

Accessories

PIVOT NIPPLE WITH FLOW LIMITING DEVICE
PART NO. 40424I
It is necessary for the cylinder assembly with the bracket.
The flow limiting device allows to reduce the speed during the window opening.

SYNTERIZED FLOW LIMITING DEVICE
PART NO. 41225V
More effective than the standard device, where a more smooth opening is required. It can be installed on opening or closing side.

ROTATING NIPPLE
PART NO. 40356N
It allows the ø 6x4 mm copper tube connection and is necessary for the cylinder assembly with the bracket.

NIPPLE WITH FLOW LIMITING DEVICE
PART NO. 36924K
The same as part No. 40356N but with flow limiting device.

Installation examples

Installation on top hinged window with connection to compressed air system

On dome with thermal valve

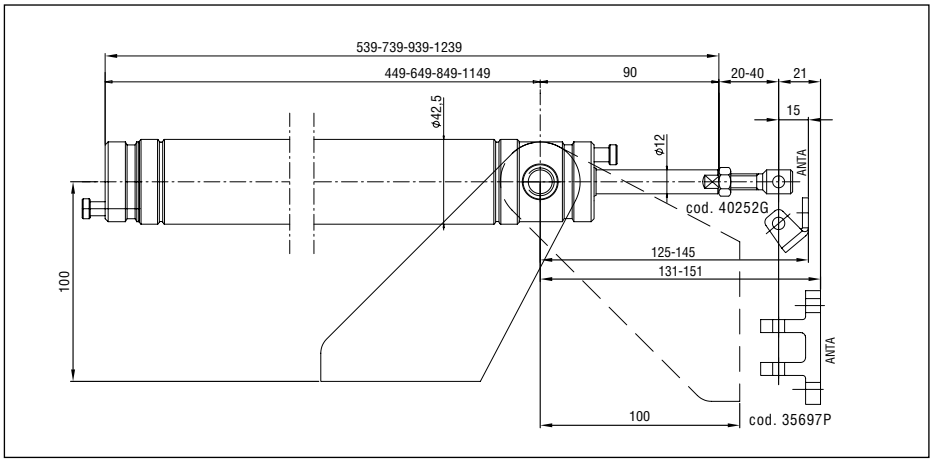

Actuators dimensions

SPECIFICATION PROSPECTS

Pneumatic cylinder Ultraflex Control Systems - Red Line, used in smoke and heat extraction systems according to UNI EN 12101-2 standard. Aluminium casing. The standard version is provided with mechanical locking device in the end stroke positions in order to keep the windows or domes open even without air pressure. It is possible the direct installation of the thermal valve.

⚠ The instructions for a safe installation are included in the section “SECURITY WARNINGS”

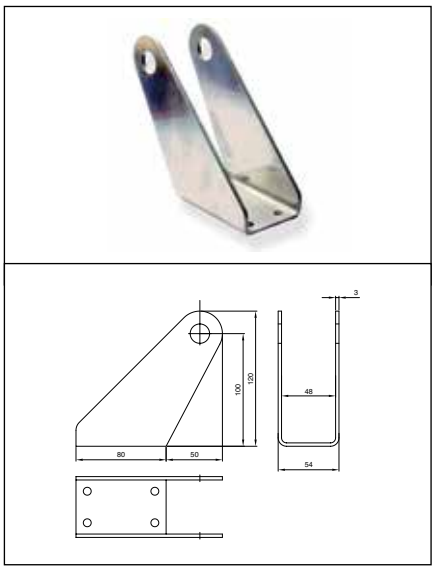

Aluminium front bracket part No. 35696O
It allows the fixing of the cylinder to the frame and the cylinder rotation during the opening phase.
The bracket is connected to the cylinder by pivot or nipples.

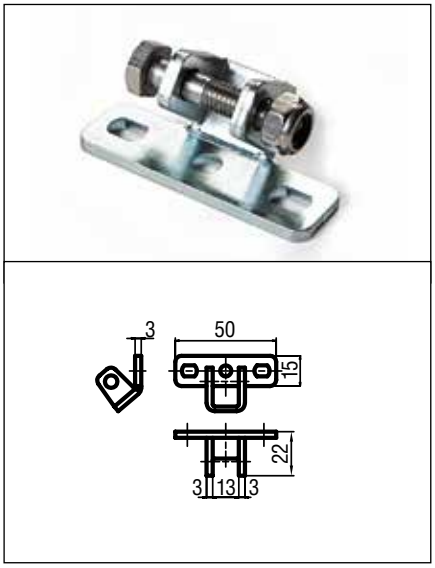

Galvanized steel connector (cylinder-vent) for ventilation part No. 40252G

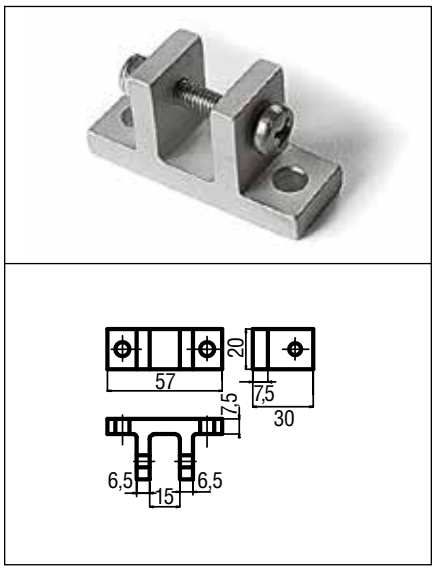

Aluminium connector (cylinder-vent) part No. 35697P

VALVES AND ACCESSORIES

The valves pierce the CO_2 cartridge in response to a thermal or electric (when the pyrotechnic device is installed) signal. The CO_2 flows into the cylinder and causes the window opening.
Ultraflex Control Systems was in 1985 the first company in Italy starting the production of these emergency systems, contributing operatively and technically to carry on the experimental tests coordinated by the "National Center for Fire Prevention".
The Ultraflex Control Systems valves grant a safe operation in case of fire and have been tested by an authorized Institute according to the
UNI EN 12101-2 standard. The valves are supplied with the 68°C (180°F) thermal bulb.
Available on request other temperatures calibrated thermal bulb. CO_2 cartridge are to be ordered separately.

⚠ The instructions for a safe installation are included in the section "SECURITY WARNINGS"

THERMAL VALVE WITH THERMAL BULB
PART No. 36751B
It is screwed directly to the cylinder (instead of the opening nipple).
The pin pierces the CO_2 cartridge when the temperature reaches the fusible link set value (68°C).
The thermal valve is arranged for the pyrotechnic device application, also successively.

THERMAL VALVE WITH THERMAL BULB WITH 1/8" THREAD
PART No. 40242E
Same features as thermal valve part No. 36751B: the 1/8" thread allows a direct connection to copper tubes by standard nipples (not supplied).

THERMAL VALVE WITH SELECTOR
PART NO. 36756G
It has the possibility to operate the cylinder by another energy supply such as a manual valves control box or a compressed air system.
It is supplied with connectors for the direct installation to cylinders and for connection to copper tubes.

SELECTING VALVE
PART NO. 36753D
It can be installed in any point of the system and allows to feed the cylinder by different energy supplies such as a manual valves control box or a compressed air system.
It is supplied with nipples for the copper tube connection.

MICRO CYLINDER
PART NO. 40932Y
It can be used for additional lock on the vent in case of installation of cylinders without lock.
1/8” input and output attacks. Box in alluminium and stainless steel rod ø 14
Dimensions: ø 38x126 mm.

MANUAL VALVE FOR VENTILATION
PART NO. 37878Y
Connected to a compressed air line, it allows the window opening and closing for daily ventilation.
The five ways valve with exhaust centres leaves the feeding ways free to enable the automatic operation in case of emergency.
It has 1/8” attacks and standard connectors are supplied for the 6x8 mm Rilsan tube.

MANUAL VALVE CONTROL BOX
It is the opening manual remote control. In case of fire for the operation it is necessary to break the glass and pull the lever down in order to obtain the punching of the CO_2 cartridge internally installed.
It is in red painted metal and provided with a sealable lock to prevent possible tamperings. The cartridges are to be ordered separately, according to the needs.
Available versions
for cartridges up to 500g PART No. 40389F

CO_2 CARTRIDGES
Standard sizes available.
(coupling to thermal bulbs 68°)

20g PART NO. 41031V
30g PART NO. 56071L
50g PART NO. 56876X
75g PART NO. 56878B
100g PART NO. 57021C

THERMAL BULBS
Red: 68°C PART NO. 56901H
Green: 93°C PART NO. 58002C
Blue: 141°C PART NO. 59501R

ELECTRIC ACCESSORIES

For pneumatic systems

The automatic smoke detection system consists in the electronic control panel and the accessories. The built-in floating batteries guarantee the system operation also in case of main supply failure.

EFC CONTROL PANEL

PART NO. 40730Q

The small size electronic control panel is provided with booster battery and allows to connect:

- smoke detectors
- emergency push-buttons
- sirens and magnets

In case of alarm, the control panel sends a 24 Vdc signal to a maximum of nr. 10 pyrotechnic devices or electro actuating devices, which are installed in the thermal valves.

VOLTAGE SUPPLY	230 Vac
OUTPUT	24 Vdc (20Ax10 ms)
SIREN OUTPUT:	24 Vcc/0,5 MA
SMOKE/HEAT DETECTOR:	max 10

⚠ The instructions for a safe installation are included in the section “SECURITY WARNINGS”

PYROTECHNIC DEVICE

PART NO. 36754E

It is a small piston containing a primer. It can be applied to the thermal valve or to the thermal valve with selector.

The detonation occurs when it is fed at 12 V or 24 V; its effect pushes a piston against the thermal bulb, breaking it.

It is for single use.

ELECTRO ACTUATING DEVICE

PART NO. 41093Z

It has to be applied on the thermal valve. When fed at 24Vdc it releases the thermal bulb allowing the thermal valve to puncture the CO_2 cartridge. It has the same function of the pyrotechnic device but it is reusable.

The thermal bulb as well will not be lost (except after a real fire situation).

Pyrotechnic device together with termal valve and cartridge.

EMERGENCY PUSH BUTTON

PART NO. 41912T

It’s necessary to break the safety strip to open the glass and operate it. Emergency push button allow to control by LEDs the status of the system, reset the control panels and close the window at the end of the emergency.

OPTICAL SMOKE DETECTOR

PART NO. 36418Q

Smoke detection by infrared light diffusion for Tyndall effect. It is certified according to the UNI EN 54-7/9.

ALARM SIGNAL	through the red LED (light emitting diode).
RESPONS TIME	3 sec. approx.
VOLTAGE SUPPLY	24 V (min. 10 V, max. 30 V)
TEMPERATURE RANGE	-10° + 80° C
DEGREE OF HUMIDITY	< 95%
MAX AIR SPEED	10 m/s
DETECTED SURFACE	40 m^2

A frequent cleaning, especially in dusty environment, is recommended.

SPECIFICATION PROSPECTS

The system for smoke and heat extraction with pneumatic cylinders must be completed with the following component according to the different kinds of installation:

Single System with automatic opening at 68° C:

- Thermal valve with CO_2 cartridge and thermal bulb set at 68° C

System with automatic opening at 68° C and ventilation control:

- Thermal valve with CO_2 cartridge and thermal bulb set at 68° C
- Selecting valve
- Manual valve for ventilation to be connected to a compressed air system.

System with automatic opening at 68° C and smoke detector:

- Thermal valve with CO_2 cartridge and thermal bulb set at 68° C
- Pyrotechnic device for breaking the thermal bulb.
- Single zone electronic control panel with floating batteries and lock, suitable to be connected to optical smoke detectors, push buttons and sirens, emergency push buttons.

InStallation Examples

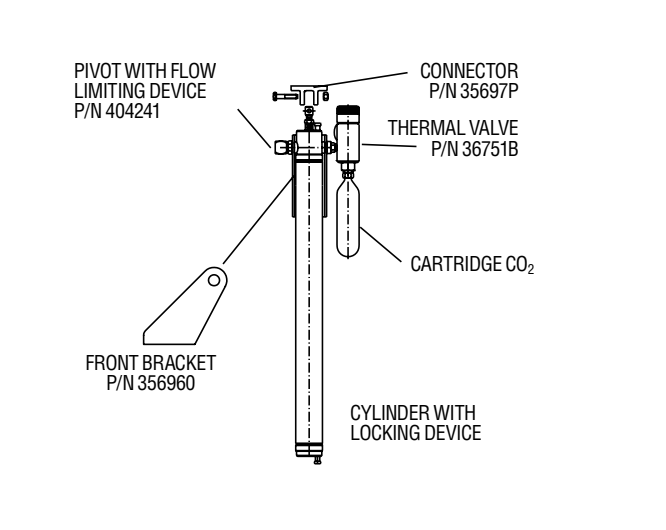

Single system with automatic opening at 68° C

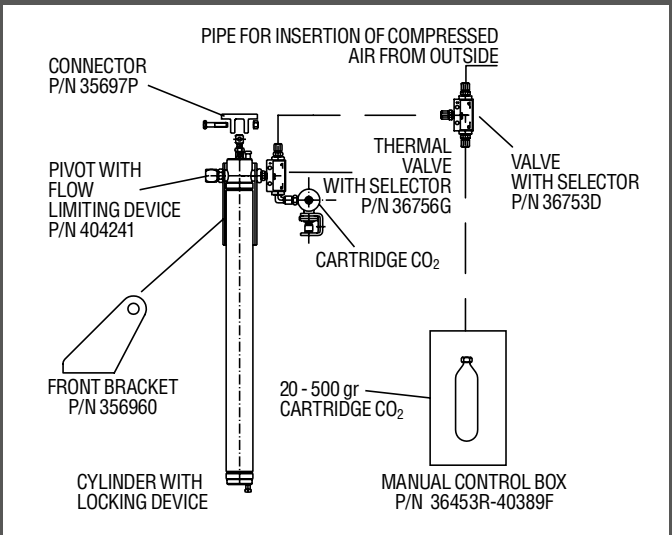

Single system with automatic opening at 68° C and manual control box and opening from outside for maintenance

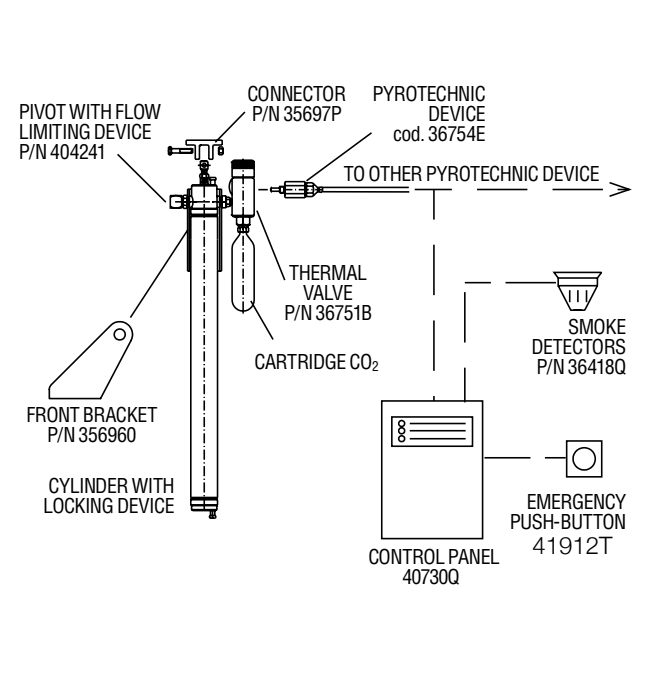

System with automatic opening at 68° C and smoke detection

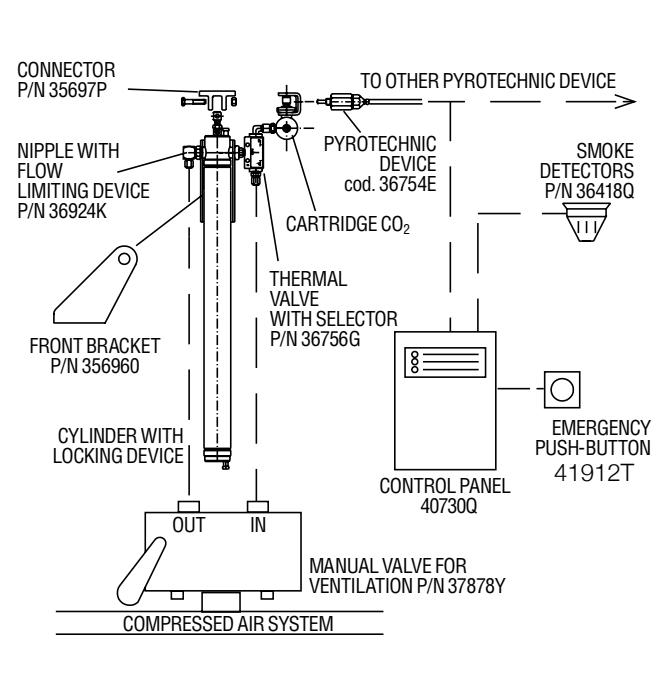

System with automatic opening at 68° C smoke detection and ventilation control

⚠ The instructions for a safe installation are included in the section “SECURITY WARNINGS”

MANUAL REMOTE CONTROLS

Mechanical systems for ventilation

The Mec Line mechanical systems for the window remote control are super-tested, reliable, economical, easy and quick to install.
The products are constantly improved thanks to the greatest experience in the window manual controls field.
The movement transmission from the control operator to the opening mechanism is effected by a steel helical cable which runs inside a steel conduit.
The installation must be carried out in order to allow the cable working in pull action during the load operation (ex. in the closing phase for bottom hinged windows and in the opening phase for top hinged windows).

Every system has to be provided with the following items:

- CONTROL OPERATOR, flat, mini, simple, concealed and geared operator.
- TRANSMISSION ELEMENTS: cable, conduit, connectors, saddles, lock springs, end plugs.
- OPENING MECHANISM, chain openers, forks and locking openers for bottom hinged windows.

To open no more then one window with one control operator, the previuos items are also contained all together in the “BRAVO” or in the “KIT for BOTTOM or TOP HINGED WINDOWS”.

In case of installations with more than one locking opener or fork, rotary junction boxes are required (see TRANSMISSION ELEMENTS section).
For a right installation the tool for conduit preparation and the conduit bender are very useful (see TRANSMISSION ELEMENTS section).

For further information regarding the installation of the Mec Line product, please ask for the installation manual.

⚠ The instructions for a safe installation are included in the section “SECURITY WARNINGS”

SPECIFICATION PROSPECTS

The Mec Line mechanical systems for the windows remote control made by Ultraflex Control Systems is composed by the following items:

- Control operators with painted steel handle named: FLAT, CONCEALED, MINI, SIMPLE AND GEARED OPERATOR.
- Transmission line formed by a steel helical cable running inside a steel conduit externally coated in PVC with an internal antifriction polyethylene tube. Other accessories allow a correct installation.
- Chain opening mechanisms both for top and bottom hinged windows with painted or anodyzed aluminium casing; available stroke 250 and 380 mm.
- Steel forks and swivel 250 mm stroke for sun louvre blades.
- Painted aluminium locking openers for bottom hinged windows, maximum stroke 250 mm.

It's possible to find the most appropriate opening mechanism and handle operator for the required system, referring to the following charts.

OPENING MECHANISM SELECTION

WINDOW TYPE	ADVISED MECHANISM	
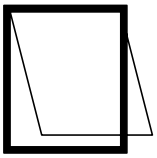	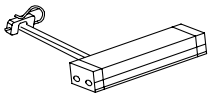 Chain mechanism	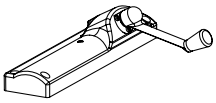 Cat
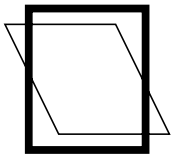	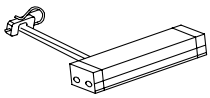 Chain mechanism	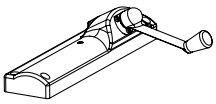 Cat
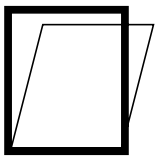	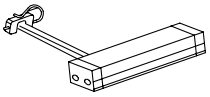 Chain mechanism	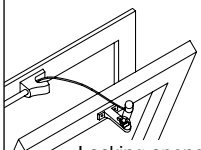 Locking opener

WINDOW TYPE	ADVISED MECHANISM	
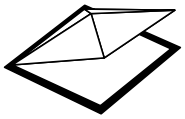	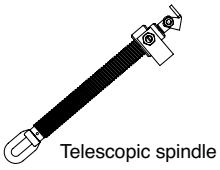 Telescopic spindle	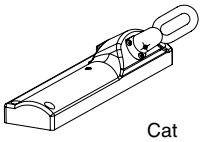 Cat
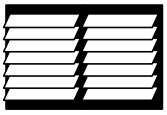	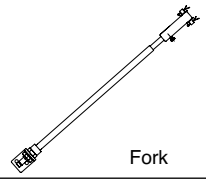 Fork	
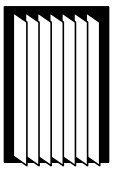	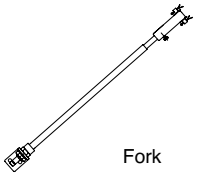 Fork	

CONTROL OPERATOR SELECTION

Following charts refer to accurate installation, executed with our tools, with only one 90° bend of the conduit and with no rotary junction box included; the wind load has not been considered. Every additional bend or rotary junction box has to be counted as an additional window. For intermediate window heights refer to the directly lower height; in case of window lower than 750 mm it is necessary to reduce the actuator stroke to 1/3 of the window height. For windows with four-bar hinges the calculation of the necessary force depends on the hinge model. Please contact our Thecnical Dpt. for any specific application.

THESE SELECTION GUIDES HAVE TO BE CONSIDERED AS A GENERAL DIRECTION AND MUST BE CHECKED BY THE INSTALLER. FOR ANY SPECIFIC APPLICATION, PLEASE CONTACT OUR TECHNICAL DEPT.

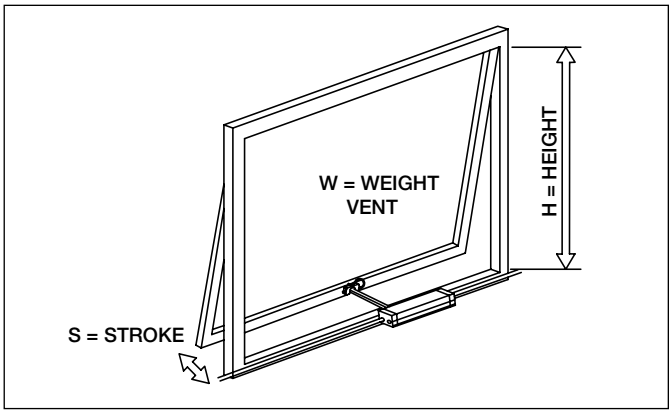

S = Stroke 250 mm

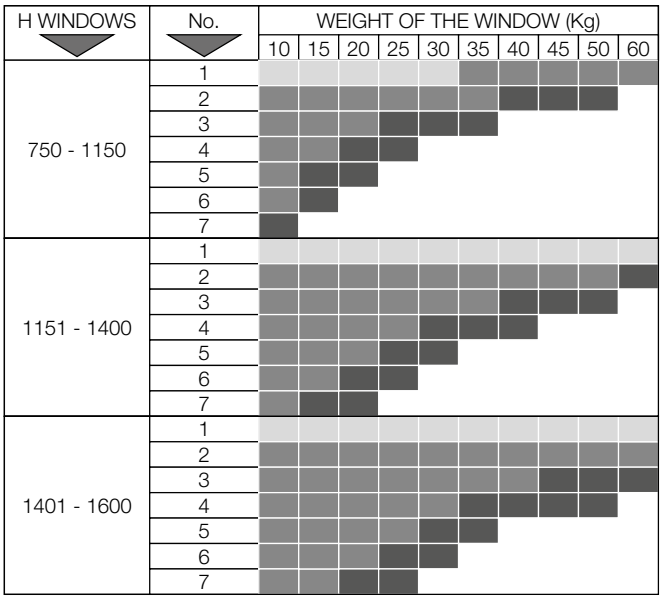

S = Stroke 380 mm

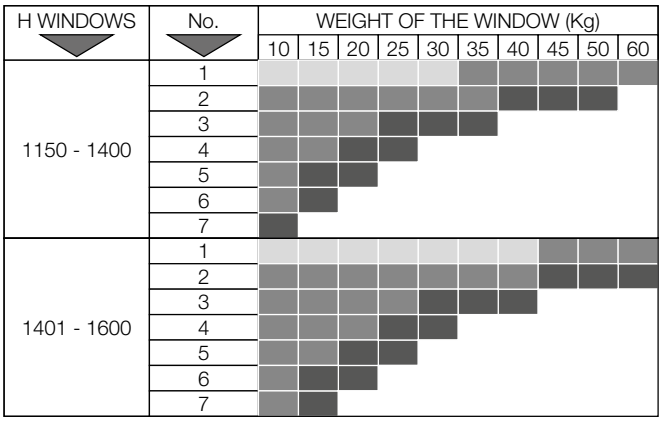

No.=No.windows+No.rotary junction boxes+No.bends (over 1)

- FLAT OPERATOR
- SIMPLE, MINI, CONCEALED OPERATOR
- GEARED OPERATOR

CONTROL OPERATORS TRANSMISSION

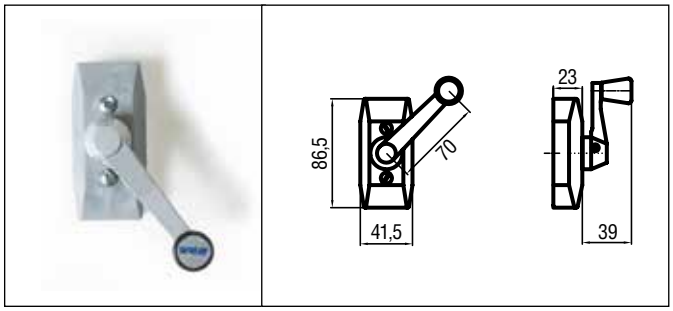

FLAT OPERATOR

PART No.		
	White	31560R
	Black	37161J
	Grey	40133A

- It can be used with the 25 cm and 38 cm chain openers and with the locking opener for single bottom hinged windows.
- The inside mechanism and the handle are made in metal and the cover in plastic.
- Maximum cable length: 6 m. The spent travel tube is external.

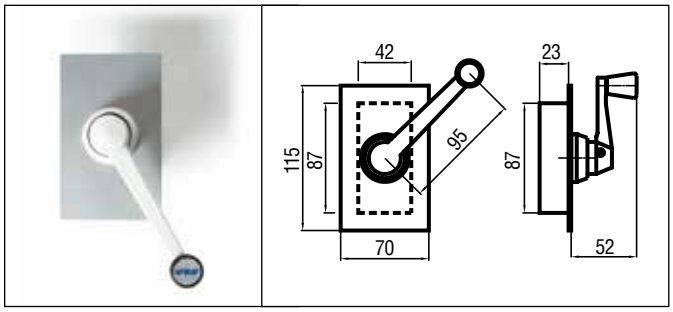

CONCEALED OPERATOR

PART No. 30745X

- It can be used with all opening mechanisms.
- It can be concealed into the wall or into the aluminium frame together with the spent travel tube.
- Completely made in metal with painted handle and aluminium anodized cover.

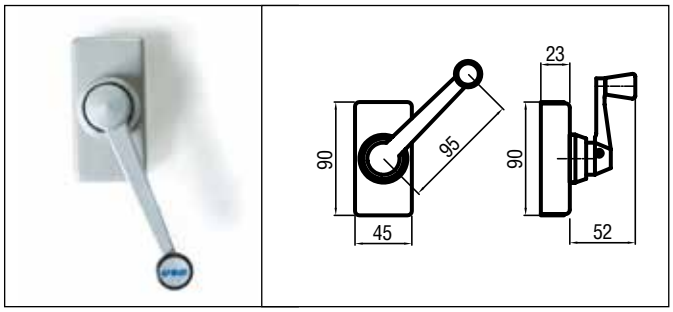

MINI OPERATOR

PART No.			
	White	RAL 9010	30748C
	Black	RAL 9005	36964S
	Grey	RAL 9006	36813E

- It can be used with all opening mechanisms.
- Completely made in metal. The spent travel tube is external.

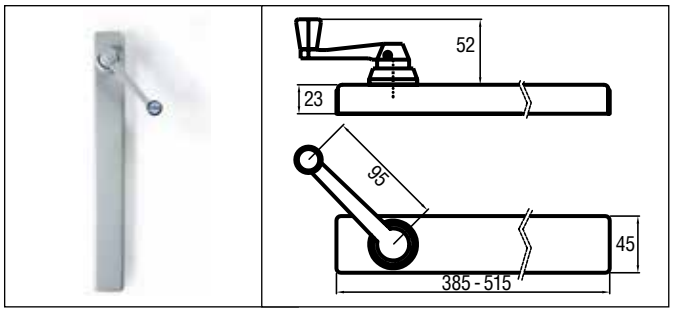

SIMPLE OPERATOR - EXTENDED SIMPLE OPERATOR

PART No.		STROKE 250 mm	STROKE 380 mm
White	RAL 9010	30750U	41344K
Black	RAL 9005	32594G	41345L
Grey	RAL 9006	37035E	41346M

- Style and efficiency are the main features of this operator.
- It incorporates the antitorsion spent travel tube which allows a maximum stroke of 25 cm or 38 cm.
- Completely made in metal.

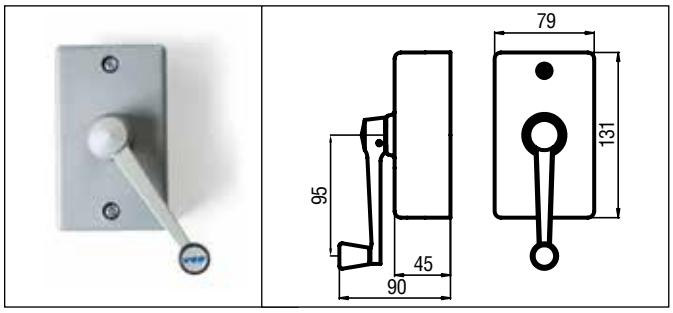

GEARED OPERATOR

PART No.			
	White	RAL 9010	40517S
	Black	RAL 9005	40543T
	Grey	RAL 9006	40544V

- Ratio: 5:1
- It can be used with all opening mechanisms.
- Particularly suitable for operating many windows simultaneously and moving heavy windows.
- The inside mechanism and the handle are made in metal. The front cover is made in plastic. The spent travel tube is external.

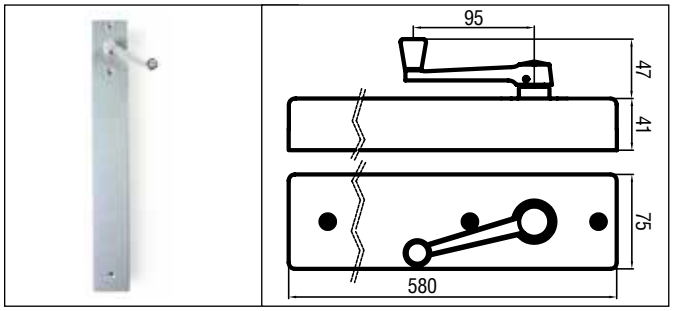

GEARED OPERATOR WITH LONG METALLIC COVER

PART No.			
	White	RAL 9010	40777R
	Black	RAL 9005	40778S
	Grey	RAL 9006	40779T

- Version of geared operator with inner anti-torque spent travel tube and metal cover

TRANSMISSION ELEMENTS

In the manual window remote control systems MEC LINE, the transmission elements are the connection between the control operator, a manually moved mechanism through which it is possible to transmit the motion, and the opening mechanism which is directly connected to the window frame and it allows the opening. The transmission elements and accessories required for a correct application are the following:

HELICAL CABLE
PART No. 30764A

It runs inside the conduit and it is the real transmission element. It is supplied in 50 meters reels.

CONDUIT

PART No.	White	40205V
	Black	40206A
	Grey	36383B

It is supplied in 3 meters steel rods externally coated in white, black or grey PVC. The internal tube is in polyethylene to make the cable sliding easier.

CONNECTOR

Part. no.	White metal	41079W
	Black metal	41078Z
	Grey metal	41080A

The junction between two conduit rods.

LOCK SPRING
PART No. 30770Y

It has to be screwed at the end of the helical cable, near the control operator.

TOOL FOR CONDUIT PREPARATION
PART No. 40097R

Necessary to prepare conduit ends.

END PLUG

PART No.	White	40139I
	Black	40174J
	Grey	40191O

It fixes the spent travel tube to the wall.

FIXING SADDLE

PART No.	White	30767D
	Black	35446R
	Grey	40134B

It is the element used to fix the conduit to the wall. It has to be placed one every meter and anyway one before and one after every bend.

ROTARY JUNCTION BOX

PART No.	White	30768G
	Black	37040B
	Grey	40135C

It is used to transfer the movement of the cable from the main line to the auxiliary ones; it is essential for systems with more than one locking opener, forks or chain openers (only if installed on windows placed upon others).

CONDUIT BENDER
PART No. 30790G

Bending radius 100 mm. To form the conduit in such an even radius allowing regular operation of the cable.

CONDUIT BENDER FOR KIT WITH ROPE
PART No. 40153E

Bending radius 50 mm.

CHAIN OPENERS

Opening mechanisms for top and bottom hinged windows

- Available with 250 mm or 380 mm stroke.
- Suitable for bottom hinged, top hinged and centre hinged windows.
- Versatility and simplicity of installation.
- Quick connection of the conduit to the chain opener: it's not necessary to work the conduit.
- Provided with quick release connector for an easy window cleaning.
- Minimum size: the minimum space for the mounting is 16 mm for top hinged windows and 36 mm for bottom hinged windows.
- The window opening stroke cannot exceed 1/3 of the window height. The chain stroke can be adjusted acting on the lock spring.
- The installation must be carried out in order to allow the cable working in pull action during the load operation (ex. in closing phase for bottom hinged windows and the opening phase for top hinged windows).
- In installations with two or more windows placed side by side, rotary junction boxes mechanism are not required.
- On windows wider than 1,5 m or anyway with a large area, for better stability to wind, it is suggested to install two or more chain openers.

PART No.	Stroke 250 mm	Stroke 380 mm
WHITE RAL 9010	37566D	37569I
BLACK ANODIZED	37565C	37568H
SILVER ANODIZED	37564B	37567E

⚠ The instructions for a safe installation are included in the section "SECURITY WARNINGS".
On bottom hinged windows for safety reasons always install side checks.

Bracket for top hinged window (included)

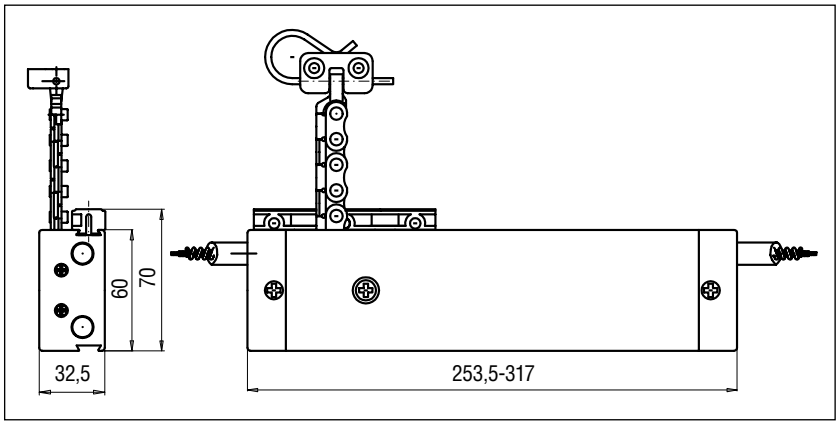

Mechanism dimensions

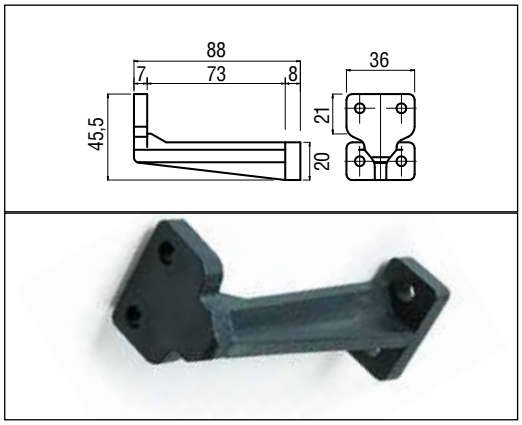

Bracket for bottom hinged part No. 37616T

Exemples of multiple installations

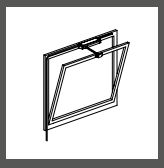

Bottom hinged windows

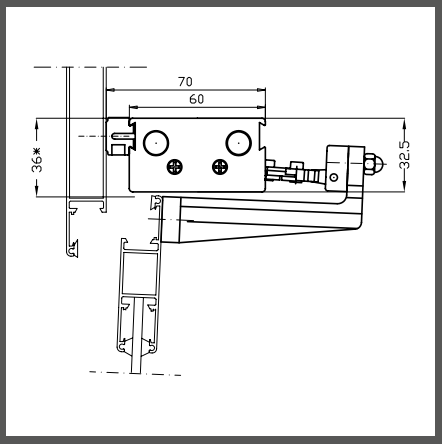

On window frame with included bracket and bracket for bottom hinged window part No. 37616T. Necessary space for installation 36 mm*

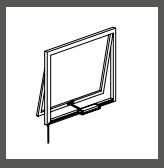

Top hinged window

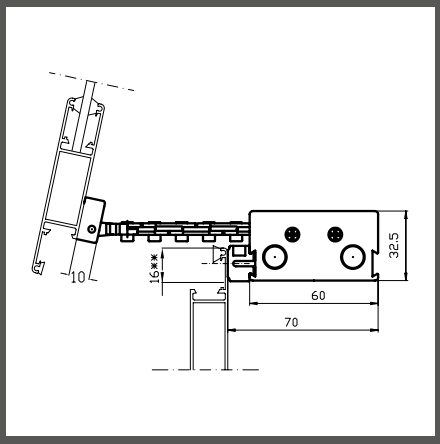

On window frame with included bracket. Necessary space for installation 16 mm**

Example of multiple installation

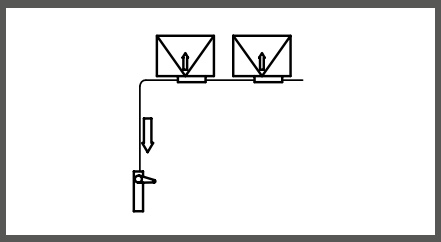

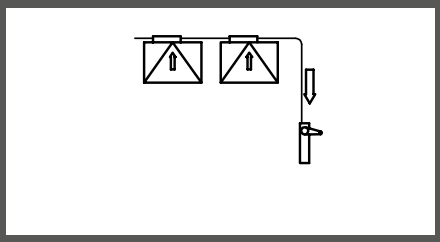

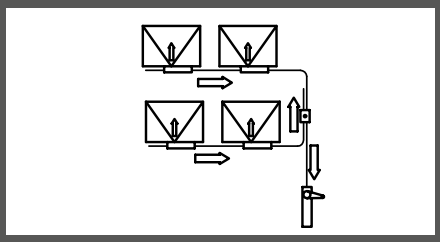

The arrows show direction of cable run during window opening

FORKS

Opening mechanisms for louvres

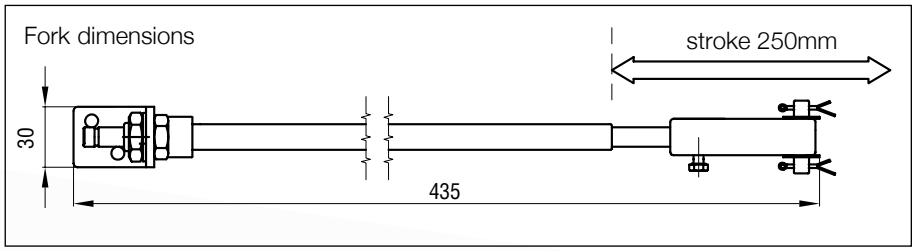

FORK AND SWIVEL - HEAVY DUTY (travel 250 mm)
PART No. 30758E

- Suitable for horizontal or vertical sun louvre blades, both for one or more windows.
- Made in stainless steel, it's suitable both for internal and external installations.
- A geared operator should be used for sun-blades and vertical louvres with more than 10 blades or for horizontal louvres with more than 14 blades.
- For installation with more than one window, rotary junction boxes have to be used.

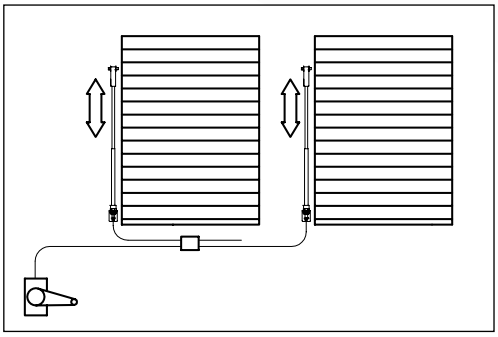

On horizontal louvre blades

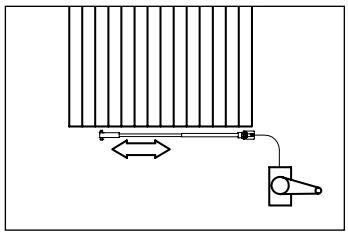

On vertical sun blades

LOCKING OPENERS

Opening mechanisms for bottom hinged windows

PART No.	WHITE	RAL 9010 30754Y
	BLACK	RAL 9005 37156M
	GREY	RAL 9006 37239Q

- It can only open bottom hinged windows which not require pushing force for the opening.
- Minimum size; the needed space for the installation is 20 mm from the vent external limit
- Maximum opening stroke: 25 cm; it can be adjusted on the end stroke spring placed in correspondence of the control operator.
- For windows with height inferior to 50 cm it is necessary to reduce the stroke to 1/3 of the window height.
- It is not necessary to work the conduit.
- In systems with more windows it is necessary to use rotary junction boxes to transmit the cable movement from the main line to the auxiliary ones.
- For windows wider than 1,5 m it is necessary to apply two or more thrust points.

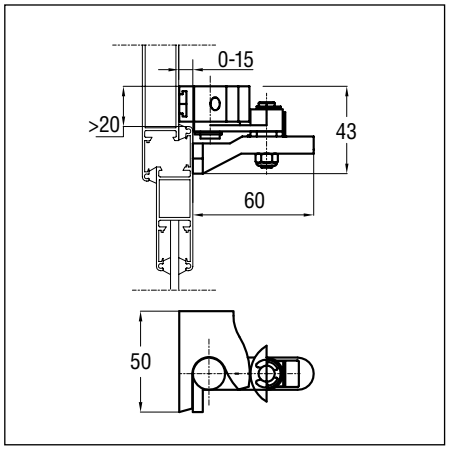

Locking opener dimensions

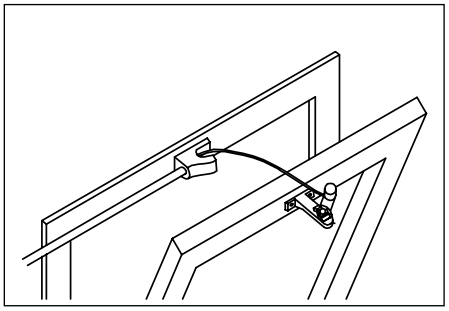

Examples of single installation

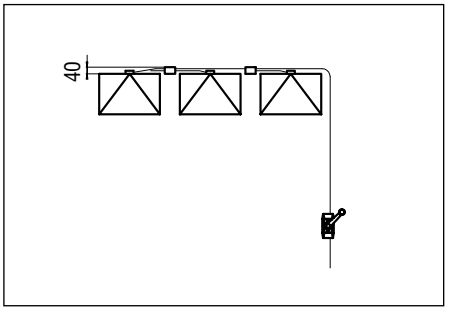

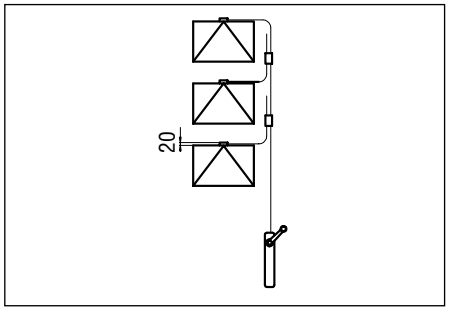

Examples of multiple installation
The dimension are measured from the external limits of the vent and show the minimum necessary space

⚠ The instructions for a safe installation are included in the section “SECURITY WARNINGS”.
On bottom hinged windows for safety reasons always install side checks.

BRAVO

Fast assembly kit for single bottom-hinged windows

- BRAVO is a fast assembly kit for single bottom-hinged window whose width does not exceed 1,5 m.
- Minimum space required: 20 mm from the vent upper profile.
- The conduit is supplied in 0.6 m bars, drown at one end: speed of assembly is ensured thanks to its insertion, with no need of joints.
- One bar of the conduit is already bended (50 mm radius), there is no need of any tool.
- Maximum opening: 250 mm; the kit is supplied complete with a pre-cut spent travel tube.
- For vents lower than 500 mm, reduce the stroke to 1/3 of the height by adjusting the end stroke spring, located by the control operator.

NOTE: to open more than one window, loose elements must be ordered.

⚠ The instructions for a safe installation are included in the section “SECURITY WARNINGS”.
On bottom hinged windows for safety reasons always install side checks.

PART No.

Conduit length		**3,05 m**	**4,25 m**	**6,05 m**
Color	WHITE	40649K	40650U	40651W
	BLACK	40652Y	40653A	40654C
	GREY	40655E	40656G	40657J

Items contained in BRAVO

Pos.	Description	Q.ty	Q.ty	Q.ty
1	Flat operator	1	1	1
2	Locking opener	1	1	1
3	Cable	3,5 m	4,7 m	6,5 m
4	Conduit	4	6	9
4A	Bent conduit	1	1	1
5	Saddle	4	6	8
6	Lock spring	1	1	1
7	Spent travel tube	1	1	1
8	End plug	1	1	1

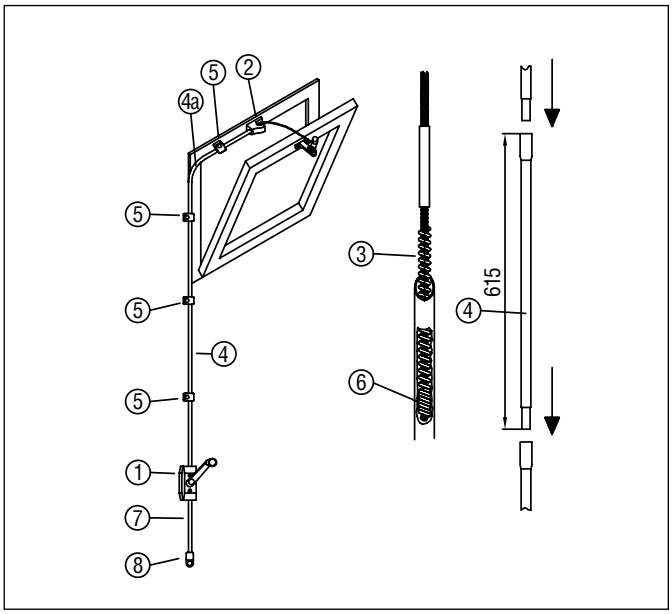

KIT for single bottom hinged windows with rope

- Suitable for single bottom hinged windows with less than 1,5 m width.
- To have less friction, in order to reduce the effort, a rope has substituted the helical cable which is present just in correspondence of the control operator.
- Quick and easy installation. The conduit preparation tool is not required.
- The small section of the conduit allows an only 50 mm radius bend: it is usually possible to install the conduit on the window frame.
- Maximum opening 250 mm; the kit is provided with already cut spent travel tube.
- The conduit, coated in PVC, is supplied in 3 m pieces.

NOTE: to open more than one window, loose elements must be ordered.

⚠ The instructions for a safe installation are included in the section “SECURITY WARNINGS”. On bottom hinged windows for safety reasons always install side checks.

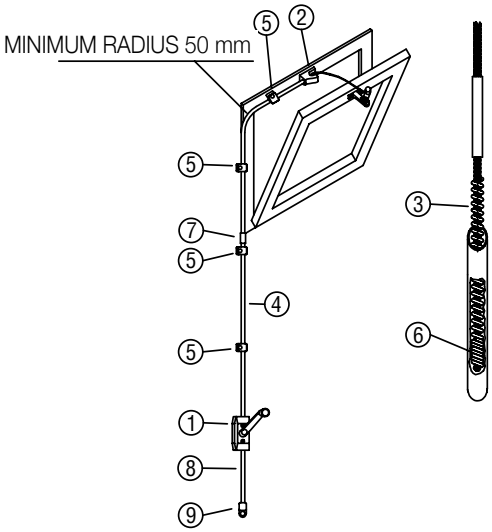

PART No.

Conduit length		**3,00 m**	**4,50 m**	**6,00 m**
Color	WHITE	40166J	40167K	40168N
	BLACK	40171G	40172H	40173I
	GREY	40194R	40195S	40196T

Items contained into the KIT

Pos.	Description	Q.ty	Q.ty	Q.ty
1	Flat operator	1	1	1
2	Locking opener	1	1	1
3	Cable	3 m	4,5 m	6 m
4	Conduit	3 m	4,5 m	6 m
5	Saddle	4	8	8
6	Lock spring	1	1	1
7	Connector	0	1	1
8	Spent travel tube	1	1	1
9	End plug	1	1	1

KIT for single top hinged windows

- Suitable for top hinged windows with less than 15, m width
- Maximum opening: 250 mm; the kit is provided with two already cut spent travel tube.
- The conduit is supplied in 3 m pieces.
- Available version: 3 m.
- Suitable for bottom hinged windows adding the bracket part No. 37616T.

⚠ The instructions for a safe installation are included in the section “SECURITY WARNINGS”

PART No.

WHITE	36715U
BLACK	37642Y
GREY	40138H

Items contained into the KIT

Pos.	Description	Quantity
1	Flat operator	1
2	Chain opener	1
3	Cable	3 m
4	Conduit	3 m
5	Saddle	3
6	Lock spring	2
7	End plug	2
8	Spent travel tube	2

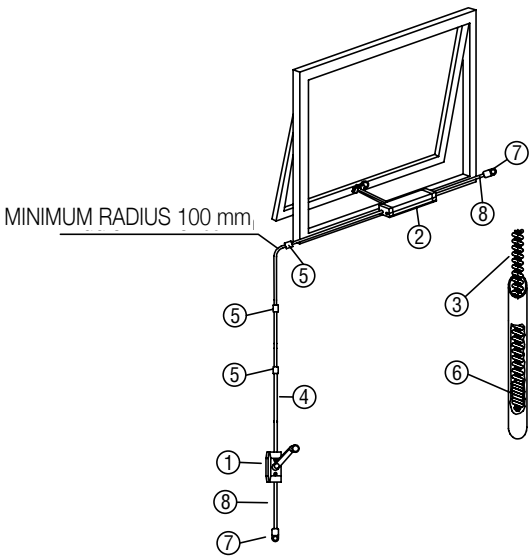

TELESCOPIC SPINDLE

- Suitable for operating skylights, domes and roof windows up to 2000 N weight.
- Opening stroke: 310 mm.
- Chrome-plated surface, spindle in brass.
- Complete bracket set included.
- Operation by crank handle.

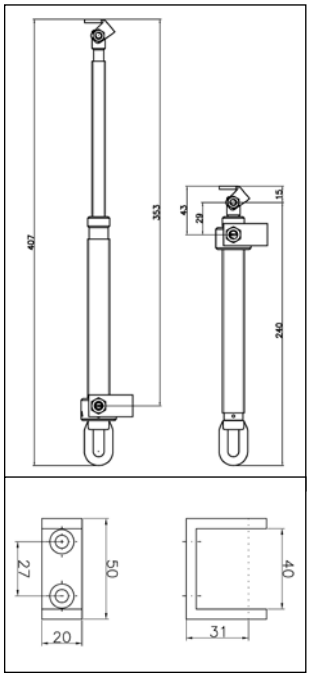

PART No.		
TELESCOPIC SPINDLE		37243K
CRANCK HANDLE		
Length	1500 mm	37244L
	2000 mm	40001L
	2500 mm	40002M
	3000 mm	40003N

SPECIFICATION PROSPECTS

Ultraflex Control Systems telescopic spindle for operating skylights and domes up to 2000 N weight. Maximum stroke 310 mm.

⚠ The instructions for a safe installation are included in the section “SECURITY WARNINGS”

CAT

Manual chain opener

- Manual chain operator for skylights, roof windows and top hinged windows.
- Easy and quick installation on wood, metal and PVC windows.
- Maximum opening approx. 260 mm. It is possible to stop the sash in any position.
- Allows window operation without remove any insect screen.
- When closed it is not possible to open the window from outside.
- Smooth and easy operation.
- Quick release system for easy window cleaning.
- Corrosion protected chain. Suitable for windows with more than 300 mm height.*
- The CAT chain actuator is supplied with a handle for installation on windowsill or eyelet for operation by crank handle for skylights or roof windows.

PART No.		WHITE RAL 9010	BLACK RAL 9005	GREY RAL 9006
CAT CHAIN OPENER WITH HANDLE		40761WIN	40807WIN	40808WIN
CAT CHAIN OPENER WITH EYELET		40761SKY	40807SKY	40808SKY
CRANK HANDLE	Lenght	1500 mm	40764E	
		2000 mm	40765F	
		2500 mm	40766G	
		3000 mm	40767H	

SPECIFICATION PROSPECTS

Ultraflex Control Systems manual actuator with chain for operating top hinged windows by handle or skylights by eyelet and crank handle. Maximum stroke 260 mm.

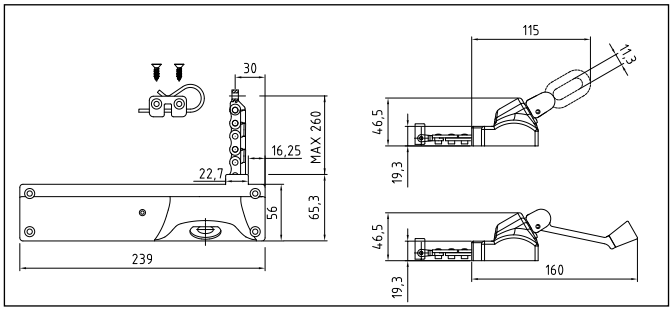

Actuator dimension

Maximum load on the chain 180N
The above value do not include any wind or snow load.

* For window less than 500 mm high, please refer to the user manual.

⚠ The instructions for a safe installation are included in the section “SECURITY WARNINGS”

GUIDE TO SELECT THE ACTUATOR

Ultraflex Control Systems proposes a complete line of electric chain and linear actuators, that allows the choice of the more suitable actuator for every kind of requirement. The following technical details are a valid support to this choice that must be effected considering the following elements:

WINDOW TYPE

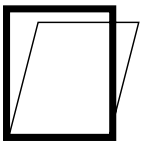

Bottom hinged windows (hinges on the bottom side, inside opening): chain actuators installation is recommended because they do not take up space inside the room and are aesthetically discreet.
Moreover, for these kind of installations, are not usually required special protection class for water or powder. The installation of linear actuators would need very long brackets (not available). For windows wider than 1,5 m we suggest to install actuators with two thrust points.

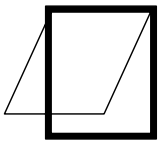

Top hinged windows (hinges on the top side, outside opening): it is recommended the installation of actuators with a special protection class and enough powerful to support with sufficient rigidity the maximum load that occurs when the window is completely opened.
We suggest actuators like Nano, Quasar, Twin Quasar, Vega, Twin Vega, Supermaster or Stilewith double link chains.
It is possible to install also linear or rack actuators, considering their encumbrance, the rotation of actuator's body and aesthetic effect. For window wider than 1,5 mm we suggest to install actuators with two thrust points, rack systems connected by connecting rod, or two actuators with control coupling unit.

Roof windows (skylights,domes, etc.): see the installation instructions for top hinged windows. The hinges can be on one of the two horizontal sides or on the two vertical sides (central rotation axis). In that case it has to be considered as height of the window, the distance between the hinges and the fixing point of the actuator; besides, consider weight as zero if window is not equipped with brakes.

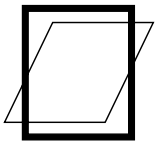

Horizontal pivoting windows: see the installation instructions for top or bottom hinged windows and bottom hinged windows according to actuator fixing position on the pivoting window. In the calculation of the opening and closing effort it is necessary to consider the height of the window as a distance between the fixing position of the actuator and the rotation point of the window, in order to avoid an extreme bending of the chain. Besides, consider weight as zero if window is not equipped with brakes.

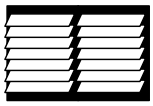

Louvres or sun blades windows: it is necessary to specify the control level stroke for their movement and the necessary force to apply on it. After this choose an adequate rack/spindle actuator (Ulysses, Max, Rack). In case the actuator is installed exposed to bad weather conditions we suggest to contat our technical department.

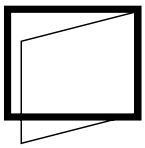

Normal turn window with hinges on the vertical sides and inside or outside opening: it is necessary to install a chain actuator on the vertical side (with the same kind of brackets for bottom and top application), considering the right installation way of the chain: it doesn't have to be bent because of the gravity force to choose the adequate stroke and brackets. For choosing the adequate stroke and brackets consider as "height" of the window the distance between the hinges and the fixing point of the actuator.

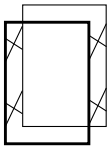

Parallel Windows (outside parallel opening): it is required the installation of at least two chain actuators with speed synchronization, in order to keep the sash parallel to the frame. For window sides wider than 1,5 m we suggest to install two actuators per side or the installation of the locking drive E-Lock connected to the internal multilocking hardware. We suggest to install Synchro Vega chain actuators because of their small size, eventually integrated inside of the curtain wall profiles, having stroke suitable to the max opening of the parallel hinges.

ACTUATOR STROKE

The necessity of a wide window opening contrasts with the following factors:

a) for a chain actuator, if it is not used the pivoting brackets kit, the stroke must not exceed 1/3 of the window height, otherwise the chain bending would cause a loss of rigidity and for this reason a loss of performance in the long run. In case of vents with four-bar hinges please contact our Technical Dpt.

b) for a linear actuator it is necessary to consider the actuator encumbrance inside the room; aesthetic effect apart, it grows as much as the required stroke increases, and it must be considered also the actuator rotation angle. In order to avoid interferences of the actuator with the elements in the room, it is necessary to evaluate carefully the position of the rotation axis opportunely choosing and positioning the fixing brackets. For this purpose, UCS proposes for all the linear actuators side fixing brackets, sliding within the proper dovetail slide on the actuator.

ACTUATOR FORCE

To calculate the window opening and closing force, please refer to the following simplified formula:
In case of vents with four-bar hinges please contact our Technical Dpt.

For vertical bottom or top hinged windows:

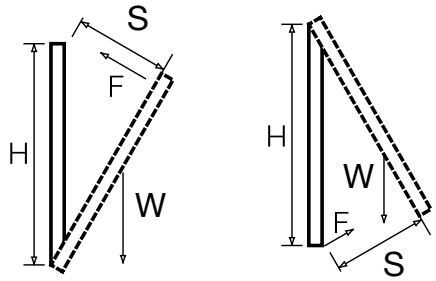

$$F\,(kg) = \frac{W\,(kg)}{2} \times \frac{S\,(mm)}{H\,(mm)}$$

$$Wmax\,(kg) = 2xF(kg) \times \frac{H\,(mm)}{S\,(mm)}$$

W = window leaf weight
Wmax = max window leaf weight
S = actuator stroke
F = required force (in kg, 1kg ~10 N)
H = window leaf height

Therefore, the required force is lower as higher is the window leaf and shorter is the required stroke.

For horizontal windows (roof windows, skylights, domes, etc.):

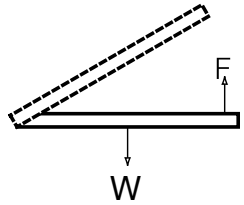

$$F\,(kg) = \frac{W\,(kg) + Sl\,(kg)}{2}$$

$$Wmax\,(kg) = [2xF(kg)] - Sl$$

W = window leaf weight
Sl = snow load
Wmax = max window leaf weight
F = required force (in kg, 1kg ~10 N)

For inclined windows apply the formula for the horizontal windows; that is necessary if during the opening the window lies in horizontal position, and anyhow for higher safety margin.

For windows with four bars (side arm) hinges: the force needed depends on the hinge used; for any further information do not hesitate to contact our technical department.

NOTE In the above mentioned formulas the wind load has not being considered: it is necessarily to be considered above all for wide windows; if they are very high, for example, the greatest part of their weight is loaded on the hinges and the required opening force is very reduced, but in case of wind the effect on the large surface is considerable and the actuator must be chosen carefully.

PROTECTION CLASS

The chain actuators are less protected from water or solid bodies (dust, sand, etc.) than the linear actuators. Some linear actuators, with protection class IP 65, are practically watertight in static conditions. For this reason we suggest to install chain actuators on bottom hinged windows or, in connection with a rain sensor, on top hinged windows. Quasar and Vega actuators are available with Protection Class IP 32.

LARGE WINDOWS

For very large windows only one pushing point in the central position cannot be sufficient.
When the window is closed its corners cannot be watertight or airtight and, anyway, when it is opened the stability is compromised in case of wind.
We recommend to install two pushing points (or pulling points) if the window is larger than 1,5 m and also for an inferior width if the window leaf rigidity (profile + glass or polycar-bonate) is not sufficient.
The installation of two electric actuators on the same window leaf is not possible if it is not used a suitable electronic (coupling) control system, because it is not possible to guarantee the constancy in time of the actuators speed, with consequent probable break of one of them.
In this case if the actuators are not equipped with the electronic stop system, it results the break of one actuator or of the window.
The control panel for coupling actuators on the same vent controls only the current absorption of the connected motors, so it can be supplied only with couples of actuators selected during their production by UCS.

The best solution for big windows are Synchro Nano, Synchro Quasar, Synchro Quasar-L, Synchro Vega, Twin Quasar and Twin Vega. These actuators are equipped with integrated speed control sensor than enable the installation of more actuators on the same window without the usage of control panel to synchronize them.
Dual rack and double rack systems enable to have two, three or four pushing points mechanically synchronized with connection nods.

For any further information do not hesitate to contact our technical department.

SAFETY WARNINGS

- Before proceeding to install an actuator, verify the following:
  - the technical features of the actuator and its own fixing accessories are suitable to the advised application, to the type, weight and dimensions of the window; in case of actuator with available fixing brackets both in plastic and aluminium, use the aluminium ones if the performances required to the actuator are close to the nominal values;
  - window frame and accessories have to be correctly sized to stand the actuator load stress;
  - the window has to be free from any window hinge or other obstacle to open for the whole stroke of the actuator;
  - the electric system has to comply with current specifications;
  - power supply has to be the one indicated by the technical features of the actuator.
- The declared nominal values do not consider any wind stress: it is necessary to evaluate it correctly to avoid any failure of the actuator or of the window, particularly in case of large windows.
- The electric actuators have to be installed on windows out of range for people only. If the windows are within reach of people, provide systems of protection against squeezing.
- For safety reasons always install side checks on bottom hinged windows.
- It is advisable to install a maintained contact push-button.
- In case of actuator installed on the vent, verify the electric cable not to be stressed or cut or pinched during operation.
- During installation or release of the actuator, be careful to avoid accidental closing of the window causing damage to people (bruise-squeezing-cut).
- The installation of two actuators on the same window is possible, only with an adequate control system or using a Synchro versions actuators.
- The installation and the actuator's connection to electrical net has to be done from qualified people only in accordance with the directives.
- Installations and/ or equipments using our products must be carried out by UCS.
- The power control and the actuators included in this catalogue are not to be considered "machinery" pointed out in the directive 2006/42/CE and following modification. In case they are included in systems that are part of the application field of these directives, it is responsibility of the installer the fulfilment of the safety requisites.

GENERAL INFORMATIONS

- The actuators are tested one by one and periodically endurance tests (10.000 cycles with maximum load) are carried out, in compliance with specifications for actuators used both for ventilation and for smoke and heat extraction.
- The technical data reported in this catalogue are referred to tests carried out in room temperature.
- The working temperature of actuators are: from - 10°C to + 60°C with maximum relative humidity 60%.
- Notes about actuators voltage supply:
  230 Vac actuators: voltage supply has to be 230 Vac ± 10% through pure sine wave;
  24 Vdc actuators: voltage supply has to be 24 Vdc ± 10%.
- In case of electric actuators connected to automatic control systems (BMS), an approval by our techical department has to be required.

QUALITY MANAGEMENT SYSTEM

The Ultraflex Control Systems Quality Management Systems has been certified by DNV-GL in conformity with the UNI EN ISO 9001:2015 rule and involves all the company resources and processes starting from the design, in order to:

- Define and comply with the customer requirements
- Set up the actions to maintain and improve the quality standards constantly
- Pursue a continuous improvement of the effectiveness and efficiency of the processes in order to meet the needs of the market and increase customer satisfaction.

WARRANTY CONDITIONS

The following warranty conditions contain the whole agreement between UCS and the buyer and substitute all the previous commitments and representation both written than verbal between the buyer and UCS. If any of the following clause results invalid or non-applicable for any reason, the remaining part of the warranty and its appliance will be not compromised. Any notification by the buyer must be sent to ULTRAFLEX CONTROL SYSTEMS, Via XXV Aprile, 45 – 16012 Busalla (GE), ITALIA.

WARRANTY
UCS products are guaranteed for a period of two years starting from the date of production identified by the serial number on the label. For substitution or repair of the products in warranty, the warranty period of the new or repaired product terminates on the date regarding the warranty period of the original product. Buyer/installer is no co-warrantor and is not authorized from UCS to modify or amend the present warranty terms in any way. If UCS confirms plain defects or non-compliance of goods, payment for indemnity or direct/indirect punitive damages in any amount and quality is excluded. Cost of labor and other costs related to the removal and reinstallation of the replaced products are excluded as well as components not produced by UCS, even if guaranteed by other manufacturers. In case of defective products due to materials, engineering and manufacturing, UCS will repair or substitute (to UCS own discretion) any defective part delivered by the customer. Shipping costs for the replaced or repaired items that fall within the terms of the present warranty, are at UCS charge. If the returned item results no defective due to materials, engineering or manufacturing, UCS will not deal with the restitution. After evaluation, UCS will inform the customer in writing about the status of the product and about the repairing costs if the product is not included in the term of the present warranty.

TERMS OF WARRANTY EXCLUSION
- Products not returned to UCS to allow direct verification of the defects and the ability to repair
- If the products cannot be identified by means of the Serial Number;
- If the warranty period, identified by means of the Serial Number, exceeds the terms or the present warranty.
- Damaged products due to wrong choice, installation and use that do not comply the specifications included in the technical manual supplied with the product;
- Damaged products due to modifications not formally approved by UCS
- Damaged products due to usage, climate conditions, improper use and maintenance, accident, fire or other occasional damages that cannot be related to the product;
- Electric actuators damaged or malfunctioned connected to building automation systems that have not been in advance and formally authorized, in writing, by UCS
- Products installed in combination with inappropriate components or components not manufactured by UCS

Besides, we underline that the present warranty does not cover costs related to removal and reinstallation of the products, routine maintenance activities and the payment of damages direct or indirect of any nature and entity. The customer is responsible for the choice and appropriate use of the product required.

LAW AND JURISDICTION
The Italian Civil Code shall apply and the Court of Genoa shall have jurisdiction in the event of any dispute.

NOTE
Descriptions and pictures in the catalogue, on the website and in all the information material are provided as a rough guide.
Any partial or total reproduction is prohibited. For further detailed information please contact our Technical Department. UCS reserves the right to modify its products at any time, without notice.

SALES CONDITIONS

ORDERS - Orders sent to ULTRAFLEX CONTROL SYSTEMS (hereinafter referred to as UCS) means total and unconditional adherence to the present sales conditions and must be transmitted in writing. These sales conditions may be in any moment modified by UCS, giving notice to customers with sales contracts in progress. The sale contract is finalized with the submission by UCS of the order confirmation which includes all the terms of the negotiation; if the order confirmation is not returned to UCS by the customer indicating different observations within 2 days from the receiving, it is understood to be irrevocably accepted in any terms.
DELIVERY - The delivery date indicated on the confirmation order should not be considered binding being dependent by the supply of materials and other facts of force majeure. The delay on the agreed delivery terms does not permit request of damages.
TRANSPORT - The goods travel at the risk and peril of the customer even if sold free of carriage. In case of losses or damages to the goods, the customer must accept with reserve indicating the fact on the transport document that has to be signed by the transporter. Claims must be notified in writing to the carrier and, for information, to UCS within 3 days from the receiving of the goods.
SALE PRICE - UCS reserves the right to change sale prices present on the list price. The confirmation order sent to the customer brings the final price and without notice to the contrary by the customer it will be considered accepted.
PAYMENT TERMS - The confirmation order contains the terms of payment. In case of delay in the payment, interest shall be effective automatically by law. In case of default in payments, also in respect of previous orders, the fulfillment of order in progress will be suspended. The right of property will be reserved as per art. 1523 of the Italian Civil Code regarding the sale.
CLAIMS - Any claim related to plain defects or non-conformity, must be communicated to UCS within 7 days from the date of receipt of the goods; in case of hidden defects, the term starts from the proved date of discovery. The customer must transmit, in writing, information regarding the defects or the non-compliances found. Return of goods without written authorization by UCS is not accepted. Defective items must be sent at customer's risk and expenses.

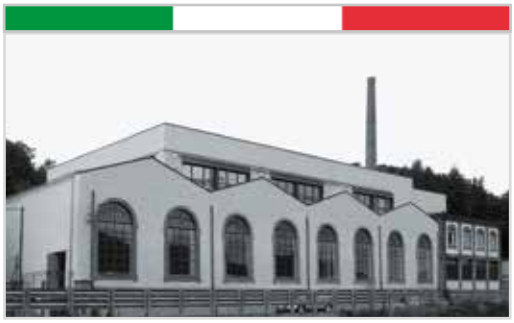

ULTRAFLEX CONTROL SYSTEMS Srl

Via XXV Aprile, 45
16012 Busalla (GE) - Italy
T +39 010 9768232 - F +39 010 9768233
ucs@ultraflexgroup.it
www.ucs.ultraflexgroup.it

ULTRAFLEX GROUP