TITAN 420

Highly efficient LED floodlight designed specifically for high mast and large area lighting.

Electronic, LED control gear driving 96 LEDs at 1.5A with asymmetrical distribution. IP67, Class I protection with 15kA Surge Protection.

Body: recyclable, extruded aluminium and powder-coated steel. Optic Enclosure: PMMA Weather-proof lenses. Reversible mounting bracket supplied, optional spigot adaptors available separately for post-top mounting.

CE LED IP67

Technical data

Performance	
Nominal Flux:	53,328 lm
Net Flux:	49,595 lm
Power Absorption:	455 W

Optoelectronics	
LED Type:	CREE XP-G3
Circuit Board:	MPCB 1.6 mm
CRI:	70 ≤ R ≤ 90
Luminous Eff Loss:	< 1% per annum
Colour Temperature:	3,000K to 5,700K
Lumen Maintenance L90 B10	63,000h
Lumen Maintenance L70 B50	>100,000h

Optics	
Secondary Lens:	Refraction Array
System Treatment:	IP67, Anti-yellowing
Available optics:	FL / FH / SW / SM / ST
No of LEDs / module:	48
No of modules:	2

Luminaire Body	
Structure:	Stainless steel
Metal coating:	Powder painted
Heatsinks:	Extruded Aluminium
Bracket:	Central Bolt 20mm
Weight:	24kg
Installation height:	15m to 45m
Installation angle:	Tilt Adjustment 360°
Dimensions:	602L x 561W x 245H mm
Windage Area:	0.049m^2

Electronics	
Voltage input range:	90-305 VAC 50-60Hz
Power Factor:	0.95
Mean time to Failure:	200,000 hrs
Dimming Function:	1-10V / DALI
Surge Protection:	15kA, IEEE C62.41.2 Location Category C High
Insulation Class:	IEC Class I
IP Rating:	IP 67
Short Circuit Protection:	Auto-recovery
Over Heat Protection:	Drops output current
Rel. Humidity Range:	0% - 94%
Operating Temp:	-40°C up to +65°C

Normative references

EN 60598-1: 2015 - Luminaires - Part 1: General requirements and tests

EN 60598-2-5: 2015 Luminaires - Part 2-5: Particular requirements - Floodlights

EN 62031: 2008 + A2:2015 - LED modules for general lighting - Safety specifications

EN 60598-2-3: 2003 + A1: 2011 - Luminaires - Part 2-3: Particular requirements - Luminaires for road and street lighting

EN 62493: 2015 Assessment of lighting equipment related to human exposure to electromagnetic fields

EN 60529: 1992 + A2: 2013 - Degrees of protection provided by enclosures (IP Code)

IEC 60068-2-52: 1996 Environmental test - Part 2: Tests - Test Kb - Salt mist cyclic (sodium chloride solutions)

EN 55015: 2013 + A1: 2015 - Limits and methods of measurement of radio disturbance characteristics of electrical lighting and similar equipment

EN 61547: 2009 - Equipment for general lighting purposes - EMC immunity requirements

EN 61000-3-2: 2014 - Electromagnetic compatibility (EMC) - Part 3-2: Limits - Limits for harmonic current emissions (equipment input current ≤ 16 A per phase)

EN 61000-3-3: 2013 - Electromagnetic compatibility (EMC) - Part 3-3: Limits - Limitation of voltage changes, voltage fluctuations and flicker in public low-voltage supply systems, for equipment with rated current ≤ 16 A per phase and not subject to conditional connection

EN 61643-11: 2012 - Low-voltage surge protective devices. Part 11: Surge protective devices connected to low-voltage power systems - Requirements and test methods

IEEE C62.41.2-2002 - Recommended practice on characterization of surges in low-voltage AC power

MIDSTREAM

Midstream Lighting Ltd, 1 Chesham Street, London SW1X 8ND, UK
Tel +44 207 584 8310 **Email** info@midstreamlighting.com
www.midstreamlighting.com

ELLISCO
> +64 9 570 5267
> info@ellis.co.nz
> www.ellis.co.nz

MADE IN BRITAIN

ELLISCO
> +64 9 570 5267
> info@ellis.co.nz
> www.ellis.co.nz

TITAN 420

Dimensions

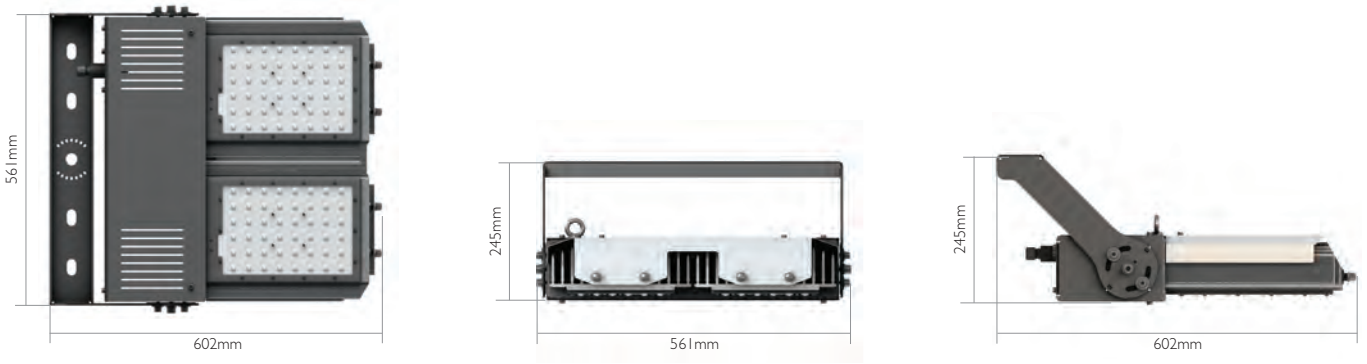

Photometrics

FH Floodlight high asymmetry

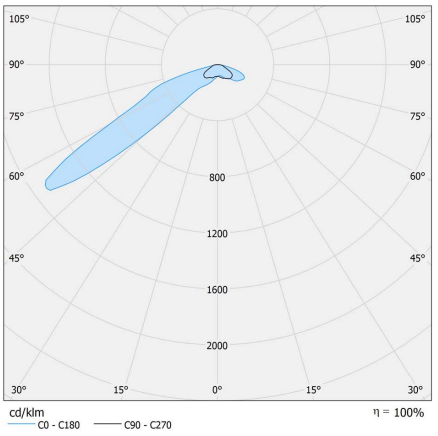

FL Floodlight low asymmetry

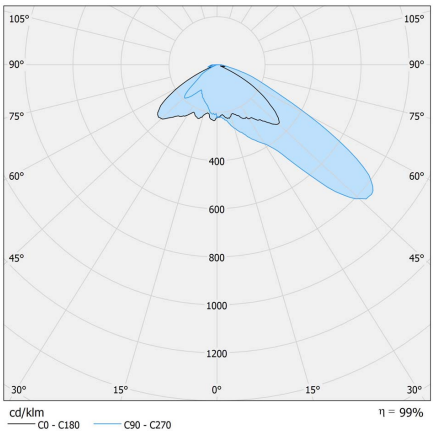

SM symmetrical medium

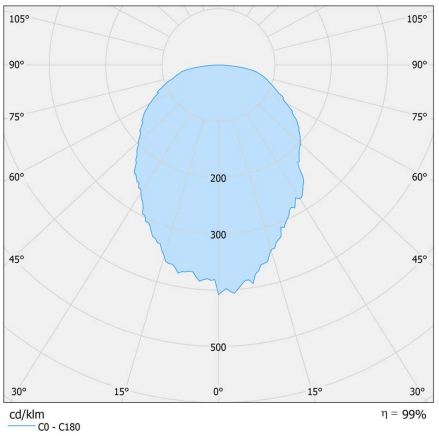

ST street optic

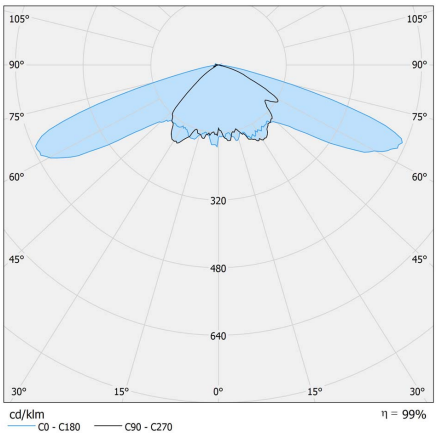

SW symmetrical wide

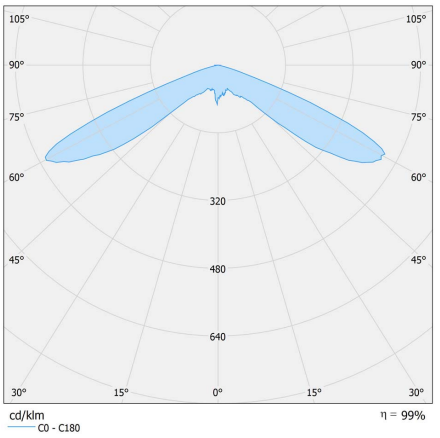

Ordering codes

Product Family	Power	Optic	CCT	Bracket	Control system	Body colour	Optional
T (Titan)	42	FL (Low Asymmetric)	A (5000K)	T (Flood Bracket)	10 (1-10V)	T (Standard)	00 (No SPD)
		FH (High Asymmetric)	B (4000K)	P (Pole Bracket)	DA (DALI)	H (High Heat)	02 (15kA SPD)
		SW (Symmetric Wide)	C (3000K)		CW (Custom Wireless)	M (Military)	
		SM (Symmetric Med)	D (5700K)		CL (Custom Line)		
		ST (Street)					

Example: T42FHATDAT02

Note: Specifications are subject to change without notice

MIDSTREAM

Midstream Lighting Ltd, 1 Chesham Street, London SW1X 8ND, UK
Tel +44 207 584 8310 **Email** info@midstreamlighting.com
www.midstreamlighting.com

MADE IN BRITAIN